DEPARTMENT OF ENERGY
(Kagawaran ng Enerhiya)
Procurement Management Division
G/F DOE Main Bldg., Energy Center, Rizal Drive cor. 34th Street
Bonifacio Global City, Taguig City, Philippines 1632
Telephone No.: (02) 3479-2900 local 428
Facsimile: (02) 8541-4105
Email address: **bacsecretariat@doe.gov.ph**

BIDDING DOCUMENTS

(Re-Bidding) Supply, Delivery, Installation and Commissioning of Electric Vehicle Charging Stations (EVCS) for FY 2026

(Purchase Request No.05-0151-2026-06-0454)

First Edition
May 2025

TABLE OF CONTENTS

Glossary of Acronyms, Terms, and Abbreviations 4

Definition of Terms 6

Section I. Invitation to Bid 8

Section II. Instructions to Bidders 15

Section III. Bid Data Sheet 47

Section IV. General Conditions of Contract 53

Section V. Special Conditions of Contract 69

Section VI. Schedule of Requirements 75

Section VII. Technical Specifications 76

Section VIII. Philippine Bidding Document Related Forms 113

Glossary of Acronyms, Terms, and Abbreviations

ABC – Approved Budget for the Contract.

BAC – Bids and Awards Committee.

BDS – Bid Data Sheet.

BIR – Bureau of Internal Revenue.

BSP – Bangko Sentral ng Pilipinas.

CDA - Cooperative Development Authority.

CIF – Cost Insurance and Freight.

CIP – Carriage and Insurance Paid.

COS – Contract of Service.

CPI – Consumer Price Index.

DDP – Delivered Duty Paid.

DOLE – Department of Labor and Employment.

DTI – Department of Trade and Industry.

EXW – Ex works.

FCA – “Free Carrier” shipping point.

FOB – “Free on Board” shipping point.

GCC - General Conditions of Contract.

GFI – Government Financial Institution.

GOCC – Government-Owned and/or –Controlled Corporation.

GoP – Government of the Philippines.

GPPB – Government Procurement Policy Board.

HoPE – Head of Procuring Entity.

INCOTERMS – International Commercial Terms.

IRR – Implementing Rules and Regulations.

ITB – Instructions to Bidders.

JO – Job Order.

LCB- Lowest Calculated Bid.

LCRB – Lowest Calculated Responsive Bid.

LGU – Local Government Unit

LoC – Letter of Credit.

MAB – Most Advantageous Bid.

MARB – Most Advantageous Responsive Bid.

MEARB – Most Economically Advantageous Responsive Bid.

MYCA – Multi-Year Contracting Authority.

NFCC – Net Financial Contracting Capacity.

NGA – National Government Agency.

PhilGEPS - Philippine Government Electronic Procurement System.

PSA – Philippine Statistics Authority.

RA No. – Republic Act Number.

SARB – Single Advantageous Responsive Bid.

SCC - Special Conditions of Contract.

SCRB – Single Calculated Responsive Bid.

SEARB – Single Economically Advantageous Responsive Bid.

SEC – Securities and Exchange Commission.

SLCC – Single Largest Completed Contract.

UN – United Nations.

Definition of Terms

Bid – a signed offer, proposal, or quotation submitted by a supplier, manufacturer, distributor, contractor, consultant, or service provider in response to the requirements of the Procuring Entity as stated in the Bidding Documents. (IRR, Section 5[c]).

Bidder – a supplier, manufacturer, distributor, contractor, consultant, and service provider, whether public or private, who submits a Bid in response to the requirements of the Procuring Entity as stated in the Bidding Documents. (IRR, Section 5[d]).

Bidding Documents – the documents issued by the Procuring Entity as the basis for Bids, furnishing all information necessary to prospective Bidder to prepare a Bid for the Goods, Infrastructure Projects, and Consulting Services required by the Procuring Entity. (IRR, Section 5[e]).

Contract – refers to the agreement entered into between the Procuring Entity and the Supplier or Manufacturer or Distributor or Service Provider for procurement of Goods and Services; Contractor for Procurement of Infrastructure Projects; or Consultant or Consulting Firm for Procurement of Consulting Services; as the case may be, as recorded in the Contract Form signed by the parties, including all attachments and appendices thereto and all documents incorporated by reference therein.

Contract Price - the price payable to the Supplier under the Contract for the full and proper performance of its contractual obligations.

Effective Date of the Contract – the date indicated in the contract. However, the Supplier shall commence performance of its obligations only upon receipt of the Notice to Proceed.

Foreign-funded Procurement or Foreign-Assisted Project – refers to the acquisition of Goods, Consulting Services, and the contracting for Infrastructure Projects by the Government of the Philippines which are wholly or partly funded by foreign loans or grants pursuant to a Treaty or International or Executive Agreement.

Framework Agreement – is a procurement strategy which shall be in the nature of an option contract between the Procuring Entity and the Bidder that stipulates the terms and conditions to be applied in subsequent contracts for the procurement of Goods, Infrastructure Projects, and Consulting Services with a single or multiple contractor, manufacturer, supplier, distributor, consultant, and service provider to expand the pool of prospective Bidders, take advantage of economies of scale, minimize the administrative burden of conducting separate procurement activities, and generate time and money savings. (IRR, Section 16.2).

Goods – refer to (i) all items, supplies, and materials, whether in the nature of equipment, furniture, stationery, materials for construction, or personal property of any kind, needed in the transaction of public businesses or in the pursuit of any government undertaking, project or activity; or (ii) general support services which pertain to all types of services except Consulting Services and Infrastructure Projects, such as the repair and maintenance of equipment and furniture, as well as trucking, hauling, janitorial, security, and related or analogous services. Personnel Services or individual COS or JO engagements do not fall under this definition; (IRR, Section 5[n])

MARB – refers to the award criteria in the procurement of Goods where the considerations for the award of contract are the eligibility of the bidder, the responsiveness of its bid to the

technical requirements, and the most advantageous bid in reference to the highest rated offer based on the quality component of the bid.

MEARB – refers to the award criteria in the procurement of Goods where the considerations for the award of contract are the eligibility of the bidder, and the responsiveness of its bid to the technical requirements, and the determination of the most economically advantageous bid in reference to the quality-price ratio allocated to the technical and financial components of the bid.

Online submission – pertains to the submission of the bid for Goods and the bid envelopes containing the technical and financial components of the bid through electronic means or through the electronic bidding facility of the PhilGEPS.

Project – refers to a specific or identified procurement covering Goods, Infrastructure Projects or Consulting Services. A Procurement Project shall be described, detailed, and scheduled in the Project Procurement Management Plan prepared by the agency which shall be consolidated in the procuring entity's Annual Procurement Plan.

Services - means those services ancillary to the supply of the Goods, such as transportation and insurance, and any other incidental services, such as installation, commissioning, provision of technical assistance, training, and other such obligations of the Supplier covered under the Contract.

Supplier – refers to a citizen, or any corporate body or commercial company duly organized and registered under the laws where it is established, habitually established in business and engaged in the manufacture or sale of the merchandise or performance of the general services covered by its Bid. Supplier as used in these Bidding Documents may likewise refer to a manufacturer, distributor, contractor, or consultant, or service provider.

Verified Report - the report submitted by the Implementing Unit to the HoPE setting forth its findings as to the existence of grounds or causes for termination and explicitly stating its recommendation for the issuance of a Notice to Terminate.

Section I. Invitation to Bid

DEPARTMENT OF ENERGY
Energy Center, Rizal Drive cor. 34th Street
Bonifacio Global City, Taguig City, Philippines 1632
Telephone No.: (02) 3479-2900 local 428
Facsimile: (02) 8541-4105
Email address: **bacsecretariat@doe.gov.ph**

INVITATION TO BID FOR THE (RE-BIDDING) SUPPLY, DELIVERY, INSTALLATION AND COMMISSIONING OF ELECTRIC VEHICLE CHARGING STATIONS (EVCS) FOR FY 2026

1) The **Department of Energy (DOE)**, through the **General Appropriations Act CY2026** intends to apply the sum of **Php160,500,820.00** being the Approved Budget for the Contract (ABC) to payments under the contract for the **(Re-Bidding) Supply, Delivery, Installation and Commissioning of Electric Vehicle Charging Stations (EVCS) for FY 2026** with **PR No. 05-0151-2026-06-0454.** Bids received in excess of the ABC shall be automatically rejected at bid opening.

Lot	Item	Location	Approved Budget Contract (ABC)
Procurement for the Supply, Delivery, Installation, and Commissioning of:			
1	EVCS for Cluster 1 – Region II	2	₱ 8,675,720.00
2	EVCS for Cluster 2 – Region II	3	₱ 13,013,580.00
3	EVCS for Cluster 3 – Region III	3	₱ 13,013,580.00
4	EVCS for Cluster 4 – Region III	1	₱ 4,337,860.00
5	EVCS for Cluster 5 – NCR – 1	3	₱ 13,013,580.00
6	EVCS for Cluster 6 – NCR and Region IV-A	3	₱ 13,013,580.00
7	EVCS for Cluster 7 – NCR – 3	3	₱ 13,013,580.00
8	EVCS for Cluster 8 – Region IV-A	1	₱ 4,337,860.00
9	EVCS for Cluster 9 – Region IV-A	4	₱ 17,351,440.00
10	EVCS for Cluster 10 – Region V	4	₱ 17,351,440.00
11	EVCS for Cluster 11 – Region V	2	₱ 8,675,720.00
12	EVCS for Cluster 12 – Region V	2	₱ 8,675,720.00

Lot	Item	Location	Approved Budget Contract (ABC)
13	EVCS for Cluster 13 – Region VI	3	₱ 13,013,580.00
14	EVCS for Cluster 14 – Region VIII	3	₱ 13,013,580.00
	TOTAL	**37**	**₱160,500,820.00**

2) The **DOE** now invites bids for the **(Re-Bidding) Supply, Delivery, Installation and Commissioning of Electric Vehicle Charging Stations (EVCS) for FY 2026** with **PR No. 05-0151-2026-06-0454.** Delivery of the Goods/Services is **One Hundred Fifty (150) calendar days upon receipt of Notice to Proceed (NTP).** Bidders should have completed at least **two (2) years** from the date of submission and receipt of bids, contracts similar to the Project. The description of an eligible bidder is contained in the Bidding Documents, particularly, in Section II. Instructions to Bidders.

3) Bidding will be conducted through competitive bidding procedures using a non-discretionary "pass/fail" criterion as specified in the Implementing Rules and Regulations of Republic Act No. 12009.[1]

   i) Bidding is open to all interested Bidders, whether local or foreign, subject to the conditions for eligibility provided in the IRR.

4) Interested Bidders may obtain further information from:

   The DOE is implementing an **Alternative Work Arrangement setting with working days at DOE from Mondays to Thursdays, and Flexible Work Arrangements on Fridays.** Interested bidders may obtain further information from the Department of Energy – Procurement Management Division and inspect the Bidding Documents at the address given below during office hours from Mondays to Thursdays from 8:00am to 4:00pm.

   Procurement Management Division
   Department of Energy
   G/F-Annex Building, Energy Center
   Rizal Drive cor. 34th Street, Bonifacio Global City
   Taguig City, Philippines 1632

   Please secure the Order of Payment by sending an email to **pmd@doe.gov.ph** or **pmarqueta@doe.gov.ph** with the following information before payment:

   1. Procurement Title or Title of Item to be Bidded: _____
   2. Company Name: _____

[1] Sec. 52.4.1.2 Foreign Bidders may be eligible to participate under any of the following circumstances in accordance with the guidelines issued by the GPPB:

a. When provided for under any treaty or international or executive agreement as provided in Section 4 of the Act and this IRR;
b. When the foreign supplier is a citizen, corporation, or association of a country, the laws, or regulations of which grant reciprocal rights or privileges to citizens, corporations, or associations of the Philippines;
c. When the goods sought to be procured are not available from local suppliers; or
d. When there is a need to prevent situations that defeat competition or restrain trade.

3. Company Address: _____
4. Email Address:_____
5. Contact No.:_____

The Order of Payment will be issued through the email address provided by the Bidder.

The DOE also accepts payment for the Bidding Documents through bank payment (Landbank of the Philippines):

Payment for	:	Bidding Documents for [Item to be Bidded]
Payee Account Name	:	DOE Trust Fund
Account Number	:	3982-1098-59
Swift Code	:	TLBPPHMM
Beneficiary Address	:	Department of Energy, Energy Center, BGC Taguig City

Copy of the payment receipt must be emailed to:

Jaymee Joy A. Deogracias:
bacsecretariat@doe.gov.ph or **jdeogracias@doe.gov.ph**

For Pre-Bid Conference purposes, the Bidding Documents may be downloaded free of charge from the website of the Philippine Government Electronic Procurement System (PhilGEPS) and the website of the Procuring Entity. The bidder shall pay the Bidding Documents not later than the submission of their bids.

Bidders are encouraged to download a copy of the Bidding Documents for Pre-Bid Conference purposes instead of physically securing a hard copy at the DOE-BAC Secretariat office.

5) A complete set of Bidding Documents may be acquired by interested Bidders on **29 October 2026** upon payment of the applicable fee for the Bidding Documents, pursuant to the latest Guidelines issued by the GPPB, based on the schedule below:

Lot	Item	Location	Approved Budget Contract (ABC)	Bidding Fee
Procurement for the Supply, Delivery, Installation, and Commissioning of:				
1	EVCS for Cluster 1 – Region II	2	₱ 8,675,720.00	₱ 2,500.00
1	EVCS for Cluster 2 – Region II	3	₱ 13,013,580.00	₱ 4,000.00
2	EVCS for Cluster 3 – Region III	3	₱ 13,013,580.00	₱ 4,000.00
3	EVCS for Cluster 4 – Region III	1	₱ 4,337,860.00	₱ 1,000.00
4	EVCS for Cluster 5 – NCR – 1	3	₱ 13,013,580.00	₱ 4,000.00

Lot	Item	Location	Approved Budget Contract (ABC)	Bidding Fee
5	EVCS for Cluster 6 – NCR and Region IV-A	3	₱ 13,013,580.00	₱ 4,000.00
6	EVCS for Cluster 7 – NCR – 3	3	₱ 13,013,580.00	₱ 4,000.00
7	EVCS for Cluster 8 – Region IV-A	1	₱ 4,337,860.00	₱ 1,000.00
8	EVCS for Cluster 9 – Region IV-A	4	₱ 17,351,440.00	₱ 4,500.00
9	EVCS for Cluster 10 – Region V	4	₱ 17,351,440.00	₱ 4,500.00
10	EVCS for Cluster 11 – Region V	2	₱ 8,675,720.00	₱ 2,500.00
11	EVCS for Cluster 12 – Region V	2	₱ 8,675,720.00	₱ 2,500.00
12	EVCS for Cluster 13 – Region VI	3	₱ 13,013,580.00	₱ 4,000.00
13	EVCS for Cluster 14 – Region VIII	3	₱ 13,013,580.00	₱ 4,000.00

It may also be downloaded free of charge from the website of the Philippine Government Electronic Procurement System (PhilGEPS) and the website of the Procuring Entity, provided that Bidders shall pay the applicable fee for the Bidding Documents not later than the submission of their bids.

6) The **DOE** will hold a Pre-Bid Conference on **8:00AM on 05 November 2026** at the **DOE-EUMB Conference Room** which shall be open to prospective Bidders. You may refer to the link provided to confirm your participation and attendance.



https://forms.office.com/r/ZUBry2BKSJ?origin=lprLink

7) Bids must be duly received by the BAC Secretariat through manual submission at the office address indicated below on or before **8:00AM of 19 November 2026** or submission could be made through courier service provided it will be stamped-received by the DOE Records Management Division or the BAC Secretariat on or before **8:00AM of 19 November 2026**. Online submission is not yet available. Late bids shall not be accepted.

   Procurement Management Division
   Department of Energy
   G/F-Annex Building, Energy Center
   Rizal Drive cor. 34th Street, Bonifacio Global City
   Taguig City, Philippines 1632

8) All Bids must be accompanied by a Bid Security in any of the acceptable forms and in the amount stated in ITB Clause 16.1.

9) Bid opening shall be on **9:00AM of 19 November 2026** at **DOE-EUMB Conference Room.** The Bidder's official and/or authorized representative, as stated in the bid submission, is required to attend the Bid Opening. Bids will be opened in the presence of the bidders' representative. Attendees shall be subject to the DOE Protocols for Visitors.

10) If the Bidder has constraints, it has the option to attend the Opening of Bids through Video conferencing using MS Teams. Prospective bidders are advised to download MS Teams app prior to the date of the Opening of Bids. The bidders are required to submit the following information through bacsecretariat@doe.gov.ph or jdeogracias@doe.gov.ph on or before **16 November 2026:**

    a) Complete name of the authorized company representative who will participate in the Pre-Bid Conference. Complete company Name, address and contact details;

    b) Active email addresses where the invitation/link will be sent; and

    c) Indicate the item/s the company would like to participate.

11) The **DOE** reserves the right to reject any and all bids, declare a failure of bidding, or not award the contract at any time prior to contract award in accordance with Section 70[2] of R.A. No. 12009, without incurring any liability to the affected Bidder or Bidders.

12) For further information, please refer to:

    Jaymee Joy A. Deogracias
    Procurement Management Division
    G/F-Annex Building., Energy Center
    Rizal Drive cor. 34th Street, Bonifacio Global City
    Taguig City, Philippines 1632
    Email address: **bacsecretariat@doe.gov.ph**
    Telephone/Facsimile: (02) 3479-2900 local 383 (02) 8541-4105
    Website: **www.doe.gov.ph**

[2] Reservation Clause

13) You may visit the following websites:

For downloading of Bidding Documents: *www.doe.gov.ph*

For electronic bid submission: *Not yet Available*

26 October 2026

sgd
Undersecretary RONALD V. CONQUILLA
Chairperson
Bids and Awards Committee

Section II. Instructions to Bidders

TABLE OF CONTENTS

A. General 19

1) Scope of Bid 19

2) Source of Funds 19

3) Corrupt, Fraudulent, Collusive, and Coercive Practices 19

4) Conflict of Interest 20

5) Eligible Bidders 22

6) Bidder's Responsibilities 24

7) Origin of Goods 26

8) Subcontracts 26

B. Contents of Bidding Documents 27

9) Pre-Bid Conference 27

10) Clarification and Amendment of Bidding Documents 27

C. Preparation of Bids 28

11) Language of Bids 28

12) Documents Comprising the Bid: Technical and Financial Components 28

13) Bid Prices 30

14) Bid Currencies 31

15) .....Bid Validity 31
16) ..... Bid Security 32
17) .....Format and Signing of Bids 34
18) ..... Sealing and Marking of Bids 34

D.....Submission and Opening of Bids 35

19) ..... Deadline for Submission of Bids 35
20) ..... Late Bids 35
21) ..... Modification and Withdrawal of Bids 35
22) ..... Opening and Preliminary Examination of Bids 36

E.....Evaluation and Comparison of Bids 37

23) .....Process to be Confidential 37
24) .....Clarification of Bids 37
25) ..... Domestic Preference 37
26) ..... Detailed Evaluation and Comparison of Bids 39
27) .....Post-Qualification 41
28) ..... Reservation Clause 42

F.....Award of Contract 43

29) .....Contract Award 43

30) ..... Signing of the Contract 44
31) ..... Performance Security 44
32) ..... Notice to Proceed 46
33) ..... Protest Mechanism 46

A. General

1) Scope of Bid

1.1 The Procuring Entity, named in the **BDS** invites bids for the Project with Identification Number which shall be specified in the **BDS.**

1.2 The Project is composed of number of lots or items as provided in the **BDS**, the details of which are described in Section VII. Technical Specifications.

2) Source of Funds

The Procuring Entity has a budget or has received funds from the Funding Source named in the **BDS**, and in the amount indicated in the **BDS**. It intends to apply part of the funds received for this Project to cover eligible payments under the contract.

3) Corrupt, Fraudulent, Collusive, and Coercive Practices

3.1 Unless otherwise specified in the **BDS**, the Procuring Entity, as well as the Bidders and Suppliers, shall observe the highest standard of ethics during the procurement and execution of the contract. In pursuance of this policy, the Procuring Entity:

a) defines, for purposes of this provision, the following terms under existing laws, rules, and regulations:

i) "corrupt practice" means an act by which officials in the public or private sectors improperly and unlawfully enrich themselves, others, or induce others to do so, by misusing the position in which they are placed, and includes the offering, giving, receiving, or soliciting of anything of value to influence the action of any such official in the procurement process or in contract execution; entering, on behalf of the government, into any contract or transaction manifestly and grossly disadvantageous to the same, whether or not the public officer profited or will profit thereby, and similar acts as provided in RA No. 3019.

ii) "fraudulent practice" means a misrepresentation of facts for purposes of influencing a procurement process or the execution of a contract to the detriment of the Procuring Entity, which includes collusive practices among Bidders (prior to or after bid submission) designed to establish bid prices at artificial, non-competitive levels and to deprive the Procuring Entity of the benefits of free and open competition.

iii) "collusive practices" means a scheme or arrangement between two or more Bidders, with or without the knowledge of the Procuring Entity, designed to establish bid prices at artificial, non-competitive levels.

iv) “coercive practices” means harming or threatening to harm, directly or indirectly, persons, or their property to influence their participation in a procurement process, or affect the execution of a contract;

v) “obstructive practice” is

a) deliberately destroying, falsifying, altering or concealing of evidence material to administrative proceedings or investigation or making false statements to investigators in order to materially impede administrative proceedings or investigation of the Procuring Entity or any foreign government/foreign or international financing institution relative to allegations of a corrupt, fraudulent, coercive, or collusive practice; and/or threatening, harassing, or intimidating any party to prevent the latter from disclosing its knowledge of matters relevant to the administrative proceedings or investigation or from pursuing such proceedings or investigation; or

b) acts intended to materially impede the exercise of the inspection and audit rights of the Procuring Entity or any foreign government/foreign or international financing institution herein.

b) Undertakes to reject a proposal for award upon *prima facie* determination that the Bidder recommended for award has engaged in any of the prohibited practices mentioned in this Clause for purposes of competing for the contract.

3.2 Further, the Procuring Entity will seek to impose the maximum civil, administrative, and/or criminal penalties available under applicable laws on individuals and organizations deemed to be involved in any of the practices mentioned in ITB Clause 3.1(a).

3.3 Furthermore, the Funding Source and the Procuring Entity reserve the right to inspect and audit records and accounts of a Bidder or Supplier in the bidding for and performance of a contract themselves or through independent auditors as reflected in the **GCC** Clause 3.

4) Conflict of Interest

4.1 All Bidders found to have conflicting interests shall be disqualified to participate in the procurement at hand, without prejudice to the imposition of appropriate administrative, civil, and criminal sanctions. A Bidder may be considered to have conflicting interests with another Bidder in any of the events described in paragraphs (a) through (c) below and a general conflict of interest in any of the circumstances set out in paragraphs (d) and (f) below:

a) A Bidder has controlling shareholders or beneficial owners in common with another Bidder;

b) A Bidder receives or has received any direct or indirect subsidy from any other Bidder;

c) A Bidder has the same legally authorized representative as that of another Bidder for purposes of this bid;

d) A Bidder has a relationship, directly or through third parties, that puts them in a position to have access to information about or influence on the bid of another Bidder or influence the decisions of the Procuring Entity regarding this bidding process; This may include a firm or an organization that lends, or temporarily seconds, its personnel to firms or organizations that are engaged in consulting services for the preparation related to procurement for or implementation of the project, if the personnel would be involved in any capacity on the same project;

e) A Bidder who participated as a consultant in the preparation of the design or technical specifications of the Goods and related services that are the subject of the bid.

f) A Bidder who lends, or temporarily seconds, its personnel to firms or organizations which are engaged in consulting services for the preparation related to procurement for or implementation of the project, if the personnel would be involved in any capacity on the same project.

4.2 All Bidding Documents shall be accompanied by an omnibus sworn statement of the Bidder that it is not related, by consanguinity or affinity up to the third level, to the HoPE, Procurement Agent (if engaged), the head of the Project Management Office (PMO), the End-User or Implementing Unit or any members of the Bids and Awards Committee (BAC), Technical Working Group (TWG), and BAC Secretariat.

4.3 The Bidder shall also disclose the ultimate beneficial ownership of an entity. Failure to comply shall be a ground for the automatic disqualification of the bid in consonance with Section 59 of the IRR. For this reason, relation to the aforementioned persons within the third civil degree of consanguinity or affinity shall automatically disqualify the Bidder from participating in the procurement of contracts of the Procuring Entity notwithstanding the act of such persons inhibiting themselves from the procurement process. This Clause shall apply to the following persons and affiliates:

a) In the case of individuals or sole proprietorships, to the Bidders and their spouses;

b) In the case of partnerships, to the partnership itself and its partners;

c) In the case of cooperatives, to the cooperative itself and members of the board of directors, general manager or chief executive officer;

d) A partnership, joint venture or consortium which is blacklisted or which has blacklisted member/s or partner/s, as well as a person

or entity who is a member of a blacklisted joint venture or consortium, are, likewise not allowed to participate in any government procurement during the period of suspension or blacklisting; and

e) In the case of corporations, a single stockholder, together with their relatives up to the third civil degree of consanguinity or affinity, and their assignees, holding at least twenty percent (20%) of the shares therein, its chairperson and president, shall be blacklisted after they have been determined to hold the same controlling interest in a previously blacklisted corporation or in two corporations that have been blacklisted; the corporations of which they are part of shall also be blacklisted.

5) Eligible Bidders

5.1 Only Bids found to be legally, technically, and financially eligible will be evaluated. For procurement of Goods, the following persons shall be eligible to participate in this bidding:

a) Duly-licensed Filipino citizens or sole proprietorships;

b) Partnerships duly organized under the laws of the Philippines and of which at least sixty percent (60%) of the interest belongs to citizens of the Philippines;

c) Corporations duly organized under the laws of the Philippines, and of which at least sixty percent (60%) of the outstanding capital stock belongs to citizens of the Philippines;

d) Cooperatives duly organized under the laws of the Philippines; and

e) Persons or entities forming themselves into a Joint Venture (JV), i.e., a group of two (2) or more persons or entities that intend to be jointly and severally responsible or liable for a particular contract: Provided, however, that Filipino ownership or interest of the JV concerned shall be at least sixty percent (60%). For this purpose, Filipino ownership or interest shall be based on the contributions of each of the members of the joint venture as specified in their Joint Venture Agreement (JVA); Provided, further, that the primary purpose of each member of the JV must be similar to or related with the requirements of the project to be bid out.

5.2 Foreign Bidders may be eligible to participate when any of the following circumstances exist, as specified in the **BDS**:

a) When provided for under any treaty or international or executive agreement as provided in Section 4 of the IRR;

b) When the foreign supplier is a citizen, corporation, or association of a country, the laws or regulations of which grant reciprocal rights or privileges to citizens, corporations, or associations of the Philippines;

c) When the Goods sought to be procured are not available from local suppliers; or

d) When there is a need to prevent situations that defeat competition or restrain trade.

5.3 GOCCs may be eligible to participate only if they can establish that they (a) are legally and financially autonomous, (b) operate under commercial law, and (c) are not attached agencies of the Procuring Entity.

5.4 The Bidder must have completed, within a period of ten (10) years from the submission of the bid, unless a shorter period is indicated in the Invitation to Bid and **BDS**, a Single Largest Completed Contract (SLCC) that is similar to the procurement project to be bid, and whose value must be equivalent to at least fifty percent (50%) of the ABC, adjusted to current prices using the Philippine Statistics Authority (PSA) consumer price indices.

5.5 If the Procuring Entity determines that it is necessary to adopt a different SLCC requirement to ensure broader Bidder participation while establishing their technical capacity, it may allow Bidders to present a combination of contracts completed within the same period, provided their total value is at least fifty percent (50%) of the ABC, thus:

a) The Bidder should have completed at least one (1) similar contract amounting to at least 25% of the ABC; and

b) The Bidder should have completed other contracts, whether similar or not, with an aggregate amount of at least 25% of the ABC.

For this purpose, the Procuring Entity may clarify in the **BDS** the definition or description of what it considers to be a similar project, which must be germane to the kind, class, or genus of goods or services to be procured, guided by the principle of proportionality and fit-for-purpose approach.

5.6 The Bidder must submit a computation of its Net Financial Contracting Capacity (NFCC), which must be at least equal to the ABC to be bid, calculated as follows:

NFCC = [(Current assets minus current liabilities) (15)] minus the value of all outstanding or uncompleted portions of the projects under ongoing contracts, including awarded contracts yet to be started coinciding with the contract to be bid.

The values of the domestic Bidder's current assets and current liabilities shall be based on the latest Audited Financial Statements (AFS) submitted to the BIR not earlier than two (2) years prior to date of bid submission.

For purposes of computing the foreign Bidders' NFCC, the value of the current assets and current liabilities shall be based on their latest AFS

prepared in accordance with International Financial Reporting Standards.

If the Bidder opts to submit a committed Line of Credit, it must be at least equal to ten percent (10%) of the ABC to be bid. Provided that, if issued by a foreign bank, it shall be confirmed or authenticated by a local bank.

6) Bidder's Responsibilities

6.1 The Bidder or its duly authorized representative shall submit an omnibus sworn statement, in the form prescribed in Section VIII. Philippine Bidding Document Related Forms, as required in ITB Clause 12.1(viii).

6.2 Before submitting their bids, the Bidder is deemed to be knowledgeable with all existing laws, decrees, ordinances, acts and regulations of the Philippines which may affect this Project in any way.

6.3 The Bidder undertook the following responsibilities:

a) Took steps to carefully examine and ensure full understanding and comprehension of the Bidding Documents, its requirements, clauses, and provisions;

b) Acknowledged all conditions, local, or otherwise, affecting the implementation of the contract;

c) Made an estimate of the facilities available and needed for the contract to be bid, if any;

d) Complied with the responsibility to inquire, or secure the Supplemental Bid Bulletin(s) as provided under ITB Clause 10.4;

e) Ensured that it is not "blacklisted" or barred from bidding by the Government of the Philippines (GoP) or any of its agencies, offices, corporations, or LGUs, including foreign government, or foreign or international financing institutions whose blacklisting rules have been recognized by the GPPB; by itself or by reason of its relation, membership, association, affiliation, or controlling interest with another blacklisted person or entity;

f) Ensured that each of the documents submitted in satisfaction with the bidding requirements is an authentic copy of the original, complete, and that all statements and information provided therein are true and correct;

g) Authorized the HoPE or its duly authorized representative/s to verify all the documents submitted;

h) Ensured that the signatory is the duly authorized representative of the Bidder, and granted full power and authority to do, execute, and perform any and all acts necessary to participate, submit the bid, to sign, and execute the ensuing contract, accompanied by the duly-notarized Special Power of Attorney, Board, or

Partnership Resolution, or Secretary's Certificate, whichever is applicable;

i) Complied with the disclosure provision under Section 81 and 82 of RA No. 12009 and its IRR, in relation to other provisions of RA 3019;

j) Complied with existing labor laws and standards, in the case of procurement of services. Moreover, the Bidder undertakes to:

   i) Ensure the entitlement of workers to wages, hours of work, safety and health and other prevailing conditions of work as established by national laws, rules and regulations; or Collective Bargaining Agreement (CBA); or arbitration award, if and when applicable.

      In case there is a finding by the Procuring Entity or the Department of Labor and Employment (DOLE) of underpayment or non-payment of workers' wages and wage-related benefits, the Bidder agrees that the performance security or portion of the contract amount shall be withheld in favor of the complaining workers pursuant to appropriate provisions of RA No. 12009, without prejudice to the institution of appropriate actions under the Labor Code, as amended, and other social legislations.

   ii) Comply with Occupational Safety and Health Standards (OSHS) and correct deficiencies, if any.

      In case of imminent danger, injury, or death of the worker, the Bidder undertakes to suspend contract implementation pending clearance to resume from the DOLE Regional Office, in compliance with the Work Stoppage Order; and

   iii) Inform the workers of their conditions of work, labor clauses under the contract specifying wages, hours of work, and other benefits under prevailing national laws, rules and regulations; or CBA; or arbitration award, if and when applicable, through posting in two (2) conspicuous places in the establishment's premises.

k) Ensured that it did not give or pay, directly or indirectly, any commission, amount, fee, or any form of consideration, pecuniary or otherwise, to any person or official, personnel, or representative of the government in relation to any procurement project or activity.

l) Examined all instructions, forms, terms, and specifications in the Bidding Documents.

m) Determined and complied with all matters pertaining to the contract to be bid, including but not limited to: (i) the location and the nature of this Project; (ii) climatic conditions; (iii) transportation facilities; and (iv) other factors that may affect the cost, duration, and execution or implementation of this Project.

n) Ensured that all information in the Bidding Documents, including bid or supplemental bid bulletin/s issued, are correct and consistent. The Procuring Entity shall not assume any responsibility regarding erroneous interpretations or conclusions by the prospective or eligible Bidder out of the data furnished by the Procuring Entity.

Failure to observe any of the above responsibilities shall be at the risk of the Bidder concerned.

6.4 Further, the Bidder shall bear all costs associated with the preparation and submission of its Bid, and the Procuring Entity shall in no case be responsible or liable for those costs, regardless of the conduct or outcome of the bidding process.

In case of failure of bidding, the Bidding Documents fee may be applied in the re-bidding for the same Project.

6.5 Furthermore, the Bidder should be aware that the Procuring Entity will accept bids only from those that have paid the applicable fee for the Bidding Documents at the office indicated in the Invitation to Bid.

7) Origin of Goods

Unless otherwise indicated in the **BDS**, there is no restriction on the origin of Goods other than those prohibited by a decision of the United Nations (UN) Security Council taken under Chapter VII of the Charter of the UN.

8) Subcontracts

8.1 Unless otherwise specified in the **BDS**, the Bidder may subcontract portions of the Goods to an extent as may be approved by the HoPE and as stated in the **BDS**. However, the subcontracted portion shall not exceed twenty percent (20%), or a different percentage of the ABC, on a per project basis, as approved by the GPPB.

8.2 Subcontracting of any portion of this Project shall not relieve the Bidder from any liability or obligation that may arise from the contract.

8.3 Subcontractors must meet the eligibility criteria and submit the same eligibility documents as the general contractor. Failure of a subcontractor to meet the eligibility criteria does not affect the eligibility of the general contractor for the Project. In such case, the portion intended to be subcontracted to the ineligible subcontractor shall be assumed by the general contractor.

8.4 Subcontracting arrangement, if allowed, including the time of submission of the eligibility documents of the subcontractor, shall be disclosed in the **BDS.**

B. Contents of Bidding Documents

9) Pre-Bid Conference

9.1 If so specified in the **BDS**, a Pre-Bid Conference shall be held either at the Procuring Entity's physical address and/or online through videoconferencing, webcasting, or similar technology, or a combination thereof, on the date indicated therein, to clarify and address the Bidders' questions on the technical and financial components of this Project.

9.2 The Pre-Bid Conference shall be held at least twelve (12) calendar days before the deadline for the submission and receipt of bids, but not earlier than seven (7) calendar days from the posting of the invitation to bid and other bidding documents in the PhilGEPS.

9.3 Bidders are highly encouraged to attend the Pre-Bid Conference to fully understand the Procuring Entity's requirements. While non-attendance of the Bidder will in no way prejudice its bid. The Bidder is deemed to know any changes and/or amendments to the Bidding Documents, as may be provided in the Supplemental Bid Bulletin.

The proceedings of the Pre-Bid Conference shall be recorded, and the corresponding minutes shall be prepared not later than five (5) calendar days after the Pre-Bid Conference. The minutes shall be made available to prospective Bidders not later than five (5) days upon written request.

9.4 Decisions of the BAC amending any provision of the Bidding Documents shall be issued in writing through a Supplemental Bid Bulletin at least seven (7) calendar days before the deadline for the submission and receipt of bids.

10) Clarification and Amendment of Bidding Documents

10.1 Prospective Bidders may **request for clarification** on and/or interpretation of any part of the Bidding Documents. Such request must be in writing and submitted to the BAC of the Procuring Entity at the address or electronic mail indicated in the **BDS** or through the electronic bidding facility of PhilGEPS, as may be applicable, **at least ten (10) calendar days before the deadline set for the submission and receipt of Bids**.

10.2 The BAC shall respond to the said request by issuing a Supplemental Bid Bulletin duly signed by the BAC Chairperson. It shall be made available to all those who have properly secured the Bidding Documents, at least seven (7) calendar days before the deadline for the submission and receipt of Bids.

10.3 Supplemental Bid Bulletins may also be issued upon the Procuring Entity's initiative for purposes of clarifying or modifying any provision of the Bidding Documents not later than seven (7) calendar days before the deadline for submission and receipt of Bids. Any modification to the Bidding Documents shall be identified as an amendment.

10.4 Any Supplemental Bid Bulletin issued by the BAC shall also be posted in the PhilGEPS, in any conspicuous place in the premises of the

Procuring Entity, and on the website or social media platforms of the Procuring Entity, if available, or such other channels as may be authorized by the GPPB. It shall be the responsibility of all prospective Bidders, including those who have properly secured the Bidding Documents, to inquire and secure Supplemental Bid Bulletins that may be issued by the BAC. However, Bidders who have submitted bids before the issuance of the Supplemental Bid Bulletin must be accordingly informed by the BAC and be allowed to modify or withdraw their bids prior to the deadline for the submission and receipt of bids in accordance with ITB Clause 21.

C. Preparation of Bids

11) Language of Bids

The eligibility requirements or statements, the bids, and all other documents to be submitted to the BAC must be in English. If the eligibility requirements or statements, the bids, and all other documents submitted to the BAC are in foreign language other than English, it must be accompanied by a translation of the documents in English. The documents shall be translated by the relevant foreign government agency, the foreign government agency authorized to translate documents, or a registered translator in the foreign Bidder's country. The Bidder shall cause the authentication of the translated documents and shall be authenticated by the appropriate Philippine foreign service establishment or post or the equivalent office having jurisdiction over the foreign Bidder's affairs in the Philippines. The English translation shall govern, for purposes of interpretation of the bid.

However, for Contracting Parties to the Apostille Convention, the documents shall be authenticated through an apostille by the Competent Authority, as defined in Section 20.9.2 of [the] IRR, except for countries identified by the DFA that will still require legalization (red ribbon) by the relevant Embassy or Consulate.

12) Documents Comprising the Bid: Technical and Financial Components

12.1 The first bid envelope shall contain the following technical documents, including the eligibility documents:

i) PhilGEPS Certificate of Registration (Platinum Membership);

ii) Statement of SLCC;

iii) NFCC Computation or committed Line of Credit (LoC);

iv) Statement of all its ongoing government and private contracts, including contracts awarded but not yet started, if any, whether similar or not similar in nature and complexity to the contract to be bid;

v) *[if applicable]* JVA) or in the absence of a JVA, duly notarized statements from all potential JV partners stating that they will enter into and abide by the provisions of the JVA in the event that the bid is successful;

vi) Bid Security in the prescribed form and amount in accordance with ITB Clause 16, and validity period under ITB Clause 15;

vii) Technical Specifications, which may include production or delivery schedule, manpower requirements, or after-sales service or parts, if applicable;

viii) Omnibus Sworn Statement; and

ix) For foreign Bidders claiming eligibility by reason of their country's extension of reciprocal rights to Filipinos, a certification from the relevant government office of their country stating that Filipinos are allowed to participate in their government procurement activities for the same item or product.

12.2 The second bid envelope shall contain the following financial documents:

a) Bid Form which includes the Bid price;

b) Price Schedules in accordance with ITB Clause 13.1; and

c) *[if applicable]* Certificate of Domestic Preference, in accordance with ITB Clause 25.

12.3 Whenever necessary, modifications may be made to the foregoing components specifically for major and specialized procurement to suit the particular needs of the Procuring Entity, subject to the approval of the GPPB.

12.4 All bids that exceed the ABC shall not be accepted. Unless otherwise indicated in the **BDS**, for foreign-funded procurement, the ABC shall be applied as the ceiling to bid prices provided the following conditions are met:

a) Bidding Documents are obtainable free of charge on a freely accessible website. If payment of Bidding Documents is required by the Procuring Entity, payment could be made upon the submission of bids.

b) The Procuring Entity has procedures in place to ensure that the ABC is based on recent estimates made by the responsible unit of the Procuring Entity and that the estimates reflect the quality, supervision and risk, and inflationary factors, as well as prevailing market prices, associated with the types of works or goods to be procured.

c) The Procuring Entity has trained cost estimators in estimating prices and analyzing bid variances.

d) The Procuring Entity has established a system to monitor and report bid prices relative to ABC and engineer's/procuring entity's estimate.

e) The Procuring Entity has established a monitoring and evaluation system for contract implementation to provide feedback on actual total costs of goods and works.

However, the GoP and the foreign government, or foreign or international financing institutions may agree to waive the foregoing conditions.

13) Bid Prices

13.1 The Bidder shall accomplish the Price Schedule Form as prescribed by the Procuring Entity, which may include the following details:

a) For Goods offered from within the Philippines:

i) The price of the Goods quoted EXW (ex works, ex factory, ex warehouse, ex showroom, or off-the-shelf, as applicable);

ii) The cost of all customs duties and sales and other taxes already paid or payable;

iii) The cost of transportation, insurance, and other costs incidental to delivery of the Goods to their final destination; and

iv) The price of other (incidental) services, if any, listed in the **BDS**.

b) For Goods offered from abroad:

i) Unless otherwise stated in the **BDS**, the price of the Goods shall be quoted Delivery Duty Paid (DDP) with the place of destination in the Philippines as specified in the **BDS**. In quoting the price, the Bidder shall be free to use transportation through carriers registered in any eligible country. Similarly, the Bidder may obtain insurance services from any eligible source country.

ii) The price of other (incidental) services, if any, listed in the **BDS**.

c) For Services, based on the form which may be prescribed by the Procuring Entity, in accordance with existing laws, rules and regulations.

13.2 The Bidder shall accomplish the appropriate Price Schedule included herein, stating the unit prices, total price per item, the total amount and the expected countries of origin of the Goods to be supplied under this Project. The Bidder shall fill in rates and prices for all items of the Goods described in the Price Schedule, which shall be presented and computed using up to two (2) decimal places, unless otherwise indicated in the **BDS.**

13.3 If the Instructions to Bidders specifically allow partial bids, bids not addressing or providing all of the required items in the Bidding Documents including, where applicable, the Price Schedule, shall be considered non-responsive and shall be automatically disqualified. However, when no price or a zero (0) or a dash (-) is indicated in a required item in the bid form, the same shall be construed that it is being offered for free to the Government, except those required by law or regulations to be provided for.

The terms Ex Works (EXW), Cost, Insurance and Freight (CIF), Cost and Insurance Paid to (CIP), (DDP), and other trade terms used to describe the obligations of the parties, shall be governed by the rules prescribed in the current edition of the International Commercial Terms (INCOTERMS) published by the International Chamber of Commerce, Paris.

13.4 Prices quoted by the Bidder shall be fixed during the Bidder's performance of the contract and not subject to variation or price escalation on any account. A bid submitted with an adjustable price quotation shall be treated as non-responsive and shall be rejected.

14) Bid Currencies

14.1 Prices shall be uoted in the following currencies:

a) For Goods that the Bidder will supply from within the Philippines, the prices shall be quoted in Philippine Peso.

b) For Goods that the Bidder will supply from outside the Philippines, the prices may be quoted in the local or tradeable currency/ies accepted by the *Bangko Sentral ng Pilipinas* (BSP), as stated in the **BDS**. However, for purposes of bid evaluation, bids denominated in foreign currencies shall be converted to Philippine currency based on the exchange rate published in the BSP Daily Reference Exchange Rate Bulletin on the day of the bid opening.[3]

14.2 If so allowed in accordance with ITB Clause 14.1, the Procuring Entity, for purposes of bid evaluation and comparing the bid prices, will convert the amounts in various currencies in which the bid price is expressed to Philippine Peso at the foregoing exchange rates.

14.3 Unless otherwise specified in the **BDS**, payment of the contract price shall be made in Philippine Peso.

15) Bid Validity

15.1 Bids shall remain valid for the period specified in the **BDS** which shall not exceed one hundred twenty (120) calendar days from the date of the opening of bids.

15.2 Should it become necessary to extend the validity of the bids and the bid securities beyond one hundred twenty (120) calendar days, the

[3] RA No. 8183, Act to assure uniform value of Philippine coin and currency

Procuring Entity concerned shall request in writing all those who submitted bids for such extension before the expiration date therefor. Bidders, however, shall have the right to refuse to grant such extension without forfeiting their Bid Security.

16) Bid Security

16.1 The Bidder shall at its option, submit a Bid Security in the form and amount as stated in the **BDS**, which may include the following:

Form of Bid Security	Amount of Bid Security (Not less than the required percentage of the ABC)
a) Cash or cashier's or manager's check issued by a bank. *For biddings conducted by LGUs, the Cashier's or Manager's check may be issued by other banks certified by the BSP as authorized to issue such financial instrument.*	Two Percent (2%)
b) Bank draft/guarantee or irrevocable LoC issued by a bank: Provided, however, that it shall be confirmed or authenticated by a local bank, if issued by a foreign bank. *For biddings conducted by LGUs, Bank Draft/Guarantee, or Irrevocable Letter of Credit may be issued by other banks certified by the BSP as authorized to issue such financial instrument.*	Five Percent (5%)
c) Surety bond callable upon demand issued by a surety or insurance company duly certified by the Insurance Commission as authorized to issue such security.	Five Percent (5%)
d) Bid Securing Declaration	Not Applicable

The Bid Security shall be denominated in Philippine Peso and posted in favor of the Procuring Entity.

16.2 The Bid Security should be valid for the period specified in the **BDS**. Any bid not accompanied by an acceptable Bid Security shall be considered as non-responsive and rejected by the Procuring Entity.

16.3 In no case shall the Bid Security be returned later than the expiration of the bid validity period indicated in the **BDS**, unless it has been extended. In case the Bidder is required to extend its bid validity, the Bidder may, at its discretion, substitute a Bid Securing Declaration for the extended period as a replacement of its Bid Security; Provided, that the option to substitute is indicated in the **BDS**.

16.4 Upon signing and execution of the contract pursuant to ITB Clause 30, and the posting of the performance security pursuant to ITB Clause 31, the Bid Security of the successful Bidder will be discharged, but in no case later than its validity period as indicated in the ITB Clause 16.2.

16.5 The Bid Security may be forfeited based on any of the following grounds, as provided under Rule VIII, X, XI, and XXI of the IRR.

a) if a Bidder:

i) Withdraws its bid during the period of bid validity specified in ITB Clause 15;

ii) Does not accept the correction of errors pursuant to ITB Clause 26.5(b) (arithmetical error);

iii) Has a finding against the veracity of any of the documents submitted as stated in ITB Clause 27.2;

iv) Submits eligibility requirements containing false information or falsified documents;

v) Submits bids that contain false information or falsified documents, or the concealment of such information in the bids to influence the outcome of eligibility screening or any other stage of the public bidding;

vi) Allows the use of one's name, or uses the name of another for purposes of public bidding;

vii) Refuses to accept an award or enter into contract with the Government without justifiable cause, after the Bidder had been adjudged as having submitted the Lowest Calculated Responsive Bid (LCRB), Most Economically Advantageous Responsive Bid (MEARB), or Most Advantageous Responsive Bid (MARB);

viii) Refuses or fails to post the required performance security within the prescribed time;

ix) Refuses to clarify or validate in writing its bid during post-qualification within a period of seven (7) calendar days from receipt of the request for clarification;

x) Has any documented attempt by a Bidder to unduly influence the outcome of the bidding in its favor; or

xi) Commits other acts that tend to defeat the purpose of the competitive bidding, Competitive Dialogue, Unsolicited Offer with Bid Matching and Limited Source Bidding, such as but not limited to habitually withdrawing from bidding, submitting late Bids or patently insufficient bid, for at least three (3) times within a year, except for valid reasons.

b) If a winning Bidder:

i) Fails to sign the contract in accordance with ITB Clause 30;

ii) Fails to furnish performance security in accordance with ITB Clause 31; or

iii) Fails to enter into joint venture after the bid is declared successful, in the case of potential JV partners.

17) Format and Signing of Bids

17.1 Bidders shall submit their bids through their duly authorized representative using the appropriate forms provided in Section VIII. Philippine Bidding Document Related Forms on or before the deadline specified in ITB Clause 19 in two (2) separate sealed bid envelopes which shall be submitted simultaneously, whether through manual or online submission. The first shall contain the technical component of the bid, including the eligibility requirements under ITB Clause 12, and the second shall contain the financial component of the bid. This shall also be observed for each lot in the case of lot procurement.

17.2 Forms as mentioned in ITB Clause 17.1 must be completed without any alterations to their format. No substitute form shall be accepted.

17.3 Each and every page of the Bid Form, including the Price Schedule, under Section VIII hereof, shall be signed by the duly authorized representative/s of the Bidder. Failure to do so shall be a ground for the rejection of the bid.

17.4 Any insertions, erasures, or overwriting shall be valid only if they are signed or initialed by the duly authorized representative/s of the Bidder.

18) Sealing and Marking of Bids

18.1 Bidders shall enclose their technical documents described in ITB Clause 12 in one sealed envelope marked “TECHNICAL COMPONENT”, and the financial component in another sealed envelope marked “FINANCIAL COMPONENT”, sealing them all in an outer envelope marked “BID”.

18.2 The Bid as indicated in the Bidding Documents shall be typed or written in ink and shall be signed by the Bidder or its duly authorized representative/s.

18.3 All envelopes shall:

a) contain the name of the contract to be bid in capital letters;

b) bear the name and address of the Bidder in capital letters;

c) be addressed to the Procuring Entity's BAC in accordance with ITB Clause 1.1;

d) bear the specific identification of this bidding process indicated in the ITB Clause 1.1; and

e) bear a warning "DO NOT OPEN BEFORE…" the date and time for the opening of bids, in accordance with ITB Clause 19.

18.4 For manually submitted bid envelopes that are not properly sealed and marked, as required in the Bidding Documents, the same shall be accepted; Provided, That the Bidder or its duly authorized representative shall acknowledge such condition of the bid as submitted. On the other hand, unsealed or unmarked bid envelopes, or bids that cannot be opened or corrupted in case of online submission, shall be rejected.

The BAC shall assume no responsibility for misplaced or lost contents of the improperly sealed or marked bid, or for its premature opening.

D. Submission and Opening of Bids

19) Deadline for Submission of Bids

Bids must be received by the Procuring Entity's BAC at the address indicated in the Invitation to bid**,** or through the e-bidding facility of the PhilGEPS on or before the date and time indicated in the **BDS.**

20) Late Bids

Bids, including the eligibility requirements, submitted after the deadline shall be rejected by the BAC. The BAC shall record in the Minutes of the Meeting the submission and opening of bids, the Bidder's name, its representative, and the time the late bid was submitted.

21) Modification and Withdrawal of Bids

21.1 Bidders may modify their bids before the deadline for the submission and receipt of bids.

a) For manual submission and receipt of bids, the Bidders shall not be allowed to retrieve their original bid but shall only be allowed to submit the bid modification by sending another bid, equally sealed, properly identified, linked to their original bid, marked as a "modification," thereof, and stamped "received" by the BAC. Bid modifications received after the applicable deadline shall not be considered and shall be returned to the Bidder unopened.

b) For online submission of bids, the Bidders shall not be allowed to retrieve their original Bid, but shall only be allowed to submit the bid modification, send another Bid equally secured, properly identified labelled as a "modification" of the one previously

submitted. The time indicated in the latest bid receipt page generated shall be the official time of submission. Bids modification submitted after the applicable deadline shall not be accepted.

21.2 Bidders may withdraw their bids in writing before the deadline for submission and receipt of bids. Withdrawal of bids after the applicable deadline shall be subject to appropriate sanctions as prescribed in the IRR.

Bidders may also express their intention not to participate in the bidding in writing, which should be received by the BAC before the deadline for submission and receipt of bids. Bidders that withdraw their bids shall no longer be allowed to submit another bid for the same contract, directly or indirectly.

21.3 No bid may be modified after the deadline for submission and receipt of bids. Further, no bid may be withdrawn in the interval between the deadline for submission and receipt of bids, and the expiration of bid validity specified by the Bidder in the Financial Bid Form. Withdrawal of bid during this interval shall result in the forfeiture of the Bidder's Bid Security pursuant to ITB Clause 16.5, and the imposition of administrative sanctions as prescribed by RA No. 12009, and without prejudice to the imposition of civil and criminal sanctions as provided under applicable laws.

21.4 Alternative Bids shall be rejected. For this purpose, Alternative Bid shall pertain to an offer made by a Bidder in addition or as a substitute to its original bid, which may be included as part of its original bid or submitted separately. A bid with options shall likewise be considered an Alternative Bid regardless of whether said bid proposal is contained in a single envelope or submitted in two (2) or more separate bid envelopes.

21.5 Each Bidder shall submit only one Bid, either individually or as a partner in a JV. Bidder who submits or participates in more than one bid (other than as a subcontractor if a subcontractor is permitted to participate in more than one bid) will cause all the proposals with the Bidder's participation to be disqualified. This shall be without prejudice to any applicable criminal, civil, and administrative penalties that may be imposed upon the persons and entities concerned.

22) Opening and Preliminary Examination of Bids

22.1 The BAC shall open the bids in public, immediately after the deadline for submission and receipt of bids, as specified in the **BDS**. In case the Bids cannot be opened as scheduled due to justifiable reasons, the BAC shall take custody of the submitted Bids and reschedule the opening of Bids on the next working day or at the soonest possible time, through the issuance of a notice of postponement to be posted on the PhilGEPS website and the website of the Procuring Entity concerned.

22.2 The manner of opening of the bids for Goods shall depend on the award criterion to be adopted as follows:

a) For LCRB and MEARB, the BAC shall open the technical and financial proposals on the same day; and

b) For MARB, only the technical proposals shall be opened on the same day while the financial proposals shall remain unopened and shall be kept securely by the BAC until the specified time of their opening as indicated in the **BDS.** Only the financial proposals of the Bidders who have met the highest technical score for Most Advantageous Bid (MAB) shall be opened.

22.3 The Procuring Entity shall prepare the minutes of the proceedings of the bid opening that shall include, as a minimum: (a) names of Bidders, their bid price (per lot, if applicable, and/or including discount, if any), bid security, findings of preliminary examination, and whether there is a withdrawal or modification; and (b) attendance sheet. The BAC members shall sign the abstract of bids as read.

22.4 The Bidders or their duly authorized representatives may attend the opening of bids. The BAC shall ensure the integrity, security, and confidentiality of all submitted bids. The Abstract of Bids, as read, and the minutes of the bid opening shall be made available to the public, upon written request and payment of a specified fee to recover the cost of materials.

22.5 To ensure transparency and accurate representation of the bid submission, the BAC Secretariat, shall notify in writing all Bidders whose bids it has received through its PhilGEPS-registered physical address or official e-mail address. The said notice shall be issued within seven (7) calendar days from the date of the bid opening.

E. Evaluation and Comparison of Bids

23) Process to be Confidential

23.1 Members of the BAC, its staff and personnel, Secretariat, and TWG, as well as Observers, are prohibited from making or accepting any communication with any Bidder regarding the evaluation of their bids until the issuance of the Notice of Award, unless otherwise allowed in ITB Clause 24.

23.2 Any effort by a Bidder to influence the Procuring Entity in its decision in respect of bid evaluation, bid comparison or contract award will result in the rejection of the bid.

24) Clarification of Bids

To assist in the evaluation, comparison, and post-qualification of the bids, the Procuring Entity may ask in writing any Bidder for a clarification of its bid. All responses to requests for clarification shall be in writing. Any clarification submitted by a Bidder in respect to its bid that is not in response to the request of the Procuring Entity shall not be considered.

25) Domestic Preference

25.1 The Procuring Entity shall give priority and preference to Philippine products and services. The preference and priority for Philippine products shall be guaranteed at all levels of the procurement process, including raw materials, ingredients, supplies, or fixtures.

25.2 For a period of ten (10) years from the effectivity of RA No. 11981 or the "*Tatak Pinoy* (Proudly Filipino) Act," and for Philippine products and services in sectors and economic activities covered by the prevailing Tatak Pinoy Strategy, the Procuring Entity is mandated to award the contract to the domestic Bidder for Philippine products and services in sectors and economic activities covered by the prevailing *Tatak Pinoy* Strategy (TPS).

Domestic Bidder, for purposes of this provision, refers to any person or entity offering unmanufactured articles, materials, or supplies grown or produced in the Philippines, or manufactured articles, materials, or supplies manufactured or to be manufactured in the Philippines substantially from articles, materials, or supplies that are or will be produced or manufactured in the Philippines, as the case may be.

25.3 After the said ten-year period, the domestic preference shall be subject to a margin of preference to be determined by the *Tatak Pinoy* Council which shall not be lower than fifteen percent (15%).

25.4 For products and services governed by the TPS, the domestic preference in procurement shall be in accordance with the IRR or guidelines issued for the *Tatak Pinoy Act.*

25.5 The Procuring Entity shall award the Project to the domestic Bidder if the bid is not more than twenty-five percent (25%) in excess of the lowest foreign bid. The margin of preference provided herein shall be subject to periodic review and adjustment by the GPPB, as may be necessary.

25.6 A Domestic Bidder can only claim preference if it secures from the appropriate agency a certification that the articles forming part of its bid are substantially composed of articles, materials, or supplies grown, produced, or manufactured in the Philippines.

25.7 The preference herein established may be waived should any of the following conditions be present as provided in the **BDS**:

a) Where domestic production is insufficient or unavailable in the required commercial quantities;

b) Where the specific or desired quality is not met;

c) Where domestic preference will result in inconsistencies with the Philippines' obligations under treaty or international or executive agreements; or

d) Other analogous circumstances.

26) Detailed Evaluation and Comparison of Bids

26.1 The Procuring Entity's evaluation of bids shall be based on the bid price quoted in the Bid Form, which includes the Price Schedule.

26.2 The Procuring Entity will undertake the detailed evaluation and comparison of the bids which have passed the opening and preliminary examination of bids, pursuant to ITB Clause 22, to determine the Lowest Calculated Bid (LCB), Most Economically Advantageous Bid (MEAB), and MAB.

26.3 The award criterion shall be determined as follows:

a) For LCB

i) The detailed evaluation of the financial component of the bids, to establish the correct calculated prices of the bids; and

ii) The ranking of the total bid prices as so calculated from the lowest to the highest, where the bid with the lowest price shall be identified as the LCB.

b) For MEAB, the BAC shall evaluate the quality and price proposals to determine the Most Economically Advantageous Bid (MEAB) using the following steps:

i) The quality proposal together with the price proposal shall be considered in the evaluation of bids. The quality proposals shall be evaluated first using the criteria in the **BDS**. The price proposals of the bids that meet the minimum quality score shall then be opened.

ii) The price and quality proposals shall be given corresponding weights with the price proposal given a minimum weight of fifteen percent (15%) up to a maximum of forty percent (40%). The weight of the quality criteria shall be adjusted accordingly such that their total weight in percent together with the weight given to the price proposal shall be equal to one hundred percent (100%).

iii) To further promote green public procurement, the sustainability of products, or materials with green specifications shall be given greater weight in the evaluation of bids. As approved by the BAC, the exact weights shall be indicated in the **BDS**. The BAC shall rank the Bidders in descending order based on the combined numerical ratings of their quality and price proposals. The Bidder with the best overall score using the quality-price ratio shall be referred to as the MEAB.

iv) The HoPE shall approve or disapprove the recommendations of the BAC within two (2) calendar days after receipt of the results of the evaluation from the BAC.

c) For MAB

i) BAC shall evaluate the quality proposals to determine the MAB using the quality components. The quality components shall be assessed on the basis of the criteria with corresponding numerical weights indicated in the **BDS** to determine the Bidder with the highest technical rating.

ii) The second bid envelope of the Bidder obtaining the highest technical rating shall be opened. If the financial proposal is equal to or lower than the ABC, the bid shall be accepted and determined as the MAB; otherwise, the same shall be rejected and the Bidder will be disqualified.

26.4 In order to eliminate bias in evaluating the quality proposals, it is recommended that the highest and lowest scores for each Bidder for each criterion shall not be considered in determining the average scores of the Bidders, except when the evaluation is conducted in a collegial manner.

26.5 The BAC shall immediately conduct a detailed evaluation of all bids using non-discretionary criteria in considering the following:

a) Completeness of the bid. Unless the **BDS** allows partial bids, bids not addressing or providing all of the required items in the **BDS**, shall be considered non-responsive and, thus, automatically disqualified.

However, when no price or a zero (0) or a dash (-) is indicated in a required item in the bid form, the same shall be construed that it is being offered for free to the Government, except those required by law or regulations to be provided for; and

b) Arithmetical corrections. The BAC shall apply arithmetical corrections on computational errors and omissions to enable proper comparison of all eligible bids. Bid corrections may also be considered if expressly allowed in the **BDS**. Any adjustment shall be calculated in monetary terms to determine the calculated prices.

26.6 Based on the detailed evaluation of bids, those that comply with the above-mentioned requirements shall be ranked in the ascending order of their total calculated bid prices, as evaluated and corrected for computational errors, discounts and other modifications, to identify the LCB, MEAB, or MAB. Total calculated bid prices, as evaluated and corrected for computational errors, discounts and other modifications, which exceed the ABC shall not be considered, unless otherwise indicated in the **BDS**.

26.7 The BAC shall evaluate all bids on an equal footing to ensure fair and competitive bid comparison. For this purpose, all Bidders shall be required to include in their bids the cost of all taxes, such as, but not limited to, value added tax (VAT), income tax, local taxes, and other fiscal levies and duties, whichever is applicable, as itemized in the bid

form and reflected in the detailed estimates. Such bids, including said taxes, shall be the basis for bid evaluation and comparison.

26.8 If so indicated pursuant to ITB Clause 1.2, bids may be submitted for individual lots or for any combination thereof, provided that all bids and combinations of bids shall be received by the same deadline and opened and evaluated simultaneously so as to determine the Bid or combination of Bids offering the lowest calculated cost to the Procuring Entity. Bid prices quoted shall correspond to all items specified for each lot and to all quantities specified for each item of a lot. Bid Security as required by ITB Clause 16 shall be submitted for each contract (lot) separately. The basis for evaluation of lots is specified in **BDS** Clause 26.5.

26.9 In order to eliminate bias in evaluating the quality proposals, it is recommended that the highest and lowest scores for each Bidder for each criterion shall not be considered in determining the average scores of the Bidders, except when the evaluation is conducted in a collegial manner.

27) Post-Qualification

27.1 The BAC shall determine to its satisfaction whether the Bidder that is evaluated as having submitted the LCB, MEAB, or MAB as the case may be, complies with and is responsive to all the requirements and conditions specified in ITB Clauses 5, 12.1, and 12.2. The Bidder, within five (5) calendar days from receipt of notice from the BAC that it submitted the LCB, MEAB, or MAB shall submit all the eligibility documents supporting its PhilGEPS Certificate of Registration (Platinum Membership), its latest income and business tax returns filed for the preceding quarter which should not be earlier than two (2) quarters from the date of submission and receipt of bid, and other appropriate licenses and permits required by law and stated in the **BDS**.

27.2 Failure to submit any of the post-qualification requirements on time, or a finding against the veracity thereof, shall disqualify the Bidder for award; Provided, That in the event that a finding against the veracity of any of the documents submitted is made, it shall cause the forfeiture of the Bid Security.

27.3 The determination shall be based upon an examination of the documentary evidence of the Bidder's qualifications submitted pursuant to ITB Clauses 12.1 and 12.2, as well as other information as the Procuring Entity deems necessary and appropriate, using a non-discretionary "pass/fail" criterion, which shall be completed within a period of twelve (12) calendar days.

27.4 If the BAC determines that the Bidder with the LCB, MEAB, or MAB fails to meet the post-qualification criteria, it shall immediately notify the said Bidder in writing of its post-disqualification and the grounds for such determination.

27.5 Immediately after the BAC has notified the first Bidder of its post-disqualification, and notwithstanding any pending request for reconsideration thereof, the BAC shall initiate and complete the same

post-qualification process on the Bidder with the second LCB, MEAB, or MAB. If the second Bidder passes the post-qualification and the request for reconsideration of the first Bidder has been denied, the second Bidder shall be post-qualified as the Bidder with the LCB, MEAB, or MAB.

27.6 If the second Bidder, however, fails the post-qualification, the procedure for post-qualification shall be repeated for the Bidder with the next LCB, MEAB, or MAB and so on, until the LCRB, MEARB, MARB, as the case may be, is determined for award, subject to the procedure of Notice and Execution of Award.

27.7 If the BAC determines that the Bidder with the LCB, MEAB, or MAB passes all the criteria for post-qualification, it shall declare the said bid as the LCRB, MEARB, MARB, Single Calculated Responsive Bid (SCRB), Single Economically Advantageous Responsive Bid (SEARB), or Single Advantageous Bid (SARB).

27.8 Within a period not exceeding ten (10) calendar days from the determination and declaration through a resolution by the BAC of the LCRB, MEARB, MARB, SCRB, SEARB, or SARB, as the case may be, and the recommendation of the award, the HoPE or its duly authorized representative shall approve or disapprove the said recommendation.

27.9 In case of approval, the HoPE or its duly authorized representative shall immediately issue the Notice of Award to the Bidder with the LCRB, MEARB, MARB, SCRB, SEARB, or SARB, as the case may be.

In the event that the approving authority shall disapprove the resolution on the award of the contract, such disapproval shall be based only on valid, reasonable, and justifiable grounds to be expressed in writing. A copy of the decision disapproving the resolution shall be furnished to the BAC and the Bidder.

28) Reservation Clause

28.1 Notwithstanding the eligibility or post-qualification of a Bidder and without incurring any liability, the HoPE or its duly authorized representative at any stage of the procurement, reserves the right to review its qualifications, reject any and all bids, declare a failure of bidding or not award the contract in the following situations:

a) If it has reasonable grounds to believe that a misrepresentation has been made by the said Bidder, or that there has been a change in the Bidder’s capability to undertake the project from the time it submitted its eligibility requirements.

b) Should such review uncover any misrepresentation made in the eligibility and bidding requirements, statements or documents, or any changes in the situation of the Bidder which will adversely affect its capability to undertake the Project so that it no longer meets the prescribed eligibility or bid evaluation criteria, the Procuring Entity shall consider the said Bidder as ineligible and disqualify it from participating further in the bidding process or being awarded the contract.

28.2 Based on any of the following grounds, the Procuring Entity reserves the right to reject any and all bids, declare a Failure of Bidding at any time prior to the contract award, or not to award the contract, without thereby incurring any liability, and make no assurance that a contract shall be entered into as a result of the bidding:

a) If there is *prima facie* evidence of collusion between appropriate public officers or employees of the Procuring Entity, or between the BAC and any of the Bidders, or if the collusion is between or among the Bidders themselves, or between a Bidder and a third party, including any act which restricts, suppresses or nullifies, or tends to restrict, suppress or nullify competition or influences or tends to influence the bidding process;

b) If the BAC is found to have failed in complying with the applicable law or in following the prescribed bidding procedures; or

c) If there are any justifiable and reasonable ground where the award of the contract will not redound to the benefit of the government, in instances where (i) the physical and economic conditions have significantly changed so as to render the Project no longer economically, financially, or technically feasible as determined by the HoPE; (ii) the Project is no longer necessary as determined by the HoPE; and (iii) the source of funds for the Project has been withheld or reduced through no fault of the Procuring Entity.

F. Award of Contract

29) Contract Award

29.1 Subject to ITB Clause 27, the HoPE or its duly authorized representative shall award the contract to the Bidder whose bid has been determined to be the LCRB, MEARB, MARB, SCRB, SEARB, or SARB, as the case may be.

29.2 Prior to the expiration of the period of bid validity, the Procuring Entity shall notify the successful Bidder in writing that its bid has been accepted, through a Notice of Award duly received by the Bidder or its representative personally or sent by registered mail or electronically, receipt of which must be confirmed in writing within two (2) days by the Bidder with the LCRB, MEARB, MARB, SCRB, SEARB, or SARB, as applicable and submitted personally or sent by registered mail or electronically to the Procuring Entity.

29.3 Within ten (10) calendar days from receipt by the winning Bidder of the Notice of Award, the following conditions should be complied with before the contract may be awarded:

a) Submission of the following documents:

i) Valid JVA, if applicable; or

ii) The SEC Certificate of Registration of the foreign corporation, if applicable.

b) Posting of the performance security in accordance with ITB Clause 31; and

c) Signing of the contract as provided in ITB Clause 30.

29.4 At the time of contract award, the Procuring Entity shall not increase or decrease the quantity of goods originally specified in Section VI. Schedule of Requirements.

30) Signing of the Contract

30.1 Within ten (10) calendar days from receipt of the Notice of Award, the winning Bidder shall (i) post the required performance security, sign and date the contract, and return it to the Procuring Entity.

30.2 The Procuring Entity shall enter into a contract with the successful Bidder within the same ten (10) calendar day period, provided that all the documentary requirements are complied with.

30.3 The following documents shall form part of the contract:

a) Contract Agreement;

b) Bidding Documents;

c) Winning Bidder's bid, including the technical and financial proposals, and all other documents/statements submitted (*e.g.,* Bidder's response to request for clarifications on the bid), including corrections to the bid, if any, resulting from the Procuring Entity's bid evaluation;

d) Performance Security;

e) Notice of Award of Contract; and

f) Other contract documents that may be required by existing laws and/or specified in the **BDS**.

31) Performance Security

31.1 To guarantee the faithful performance of its obligations under the contract, the winning Bidder shall post a performance security prior to the signing of the contract. Furthermore, the successful Bidder shall be required to update the performance security posted before the issuance of an amendment to order if any.

31.2 Sectors enumerated under Section 76.1[4] of the IRR may be allowed to post a Performance Securing Declaration (PSD) as specified in the **BDS.**

31.3 The performance security shall be in any form selected by the Procuring Entity in the amount indicated in the **BDS**, which shall not be less than the percentage of the total contract price in accordance with the following price schedule:

Form of Performance Security	Amount of Performance Security (Not less than the Percentage of the Total Contract Price)
a. Cash or Cashier's or Manager's check issued by a bank. *For biddings conducted by LGUs, the Cashier's or Manager's check may be issued by other banks certified by the BSP as authorized to issue such financial instrument.*	Five percent (5%)
b. Bank draft or guarantee or irrevocable Letter of Credit issued by a local bank. If issued by a foreign bank, it shall be confirmed or authenticated by a local bank.	
ii. Surety bond callable upon demand issued by a surety or insurance company duly certified by the IC as authorized to issue such security.	Thirty Percent (30%)

31.4 The performance security shall be denominated in Philippine Peso and posted in favor of the Procuring Entity, which shall be forfeited in the event it is established that the winning Bidder is in default in any of its obligations under the contract.

---

[4] Section 76.1 The GPPB, once data is available from relevant agencies, shall maintain a registry of entities belonging to the following sectors:

a) Farmers, as certified by the Department of Agriculture (DA);
b) Fisherfolk as certified by the Bureau of Fisheries and Aquatic Resources (BFAR);
c) Persons with disabilities as certified by the National Council for Disability Affairs (NCDA) pursuant to RA No. 7277, otherwise known as the Magna Carta for Disabled Persons, as amended;
d) Solo parents as certified by the Department of Social Welfare and Development (DSWD);
e) Microenterprises and social enterprises as certified by the MSMED Council;
f) Startups, Spin-offs, and other forms of entity involved in Science, Technology, and Innovation (DOST), as may be applicable;
g) Cooperatives duly registered with the CDA pursuant to RA No. 6938, otherwise known as the Cooperative Code of the Philippines, as amended; and
h) Other relevant sectors as may be determined by the GPPB to ensure inclusivity and diversity in the procurement process.

32) Notice to Proceed

The Procuring Entity shall issue the Notice to Proceed to the winning Bidder not later than three (3) calendar days from the date of approval of the contract by the appropriate signatories. All notices called for by the terms of the contract shall be effective only at the time of receipt thereof by the successful Bidder.

33) Protest Mechanism

Decisions of the BAC in all stages of procurement may be protested to the HoPE in accordance with Section 83 of the IRR.

Section III. Bid Data Sheet

Bid Data Sheet

ITB Clause	
1.1	The Procuring Entity is **DOE.** The Project title is **(Re-Bidding) Supply, Delivery, Installation and Commissioning of Electric Vehicle Charging Stations (EVCS) for FY 2026.** The identification number of the Contract is **Purchase Request No. 05-0151-2026-06-0454.** *[**Note**: The Project Identification Number may be assigned by the Procuring Entity based on its own coding system or the PhilGEPS reference number generated after the posting of the bid opportunity on the PhilGEPS website.]*
1.2	The number of lot(s): **Fourteen (14)**.
2	The Funding Source is: 2.1 The GoP through the source of funding as indicated below for **CY2026 GAA** in the amount of **Php160,500,820.00.** 2.2 The source of funding is: **a) GAA, the General Appropriations Act CY2026.**
3.1	No further instructions.
5.2	Foreign Bidders, except those falling under ITB Clause 5.2(b), may not participate in this Project.
5.4	The Bidder's SLCC similar to the contract to be bid should have been completed **within two (2) years** prior to the deadline for the submission and receipt of bids. For this purpose, contracts similar to the Project shall be: a. Contracts similar in nature shall refer supply, delivery, installation, testing, commissioning, and integration of electric power, energy, or charging infrastructure systems, including but not limited to Electric Vehicle Charging Stations (EVCS), charging equipment, renewable energy systems, electrical equipment, power distribution systems, battery energy storage systems, and other similar electrical or electromechanical facilities b. completed within two (2) years prior to the deadline for the submission and receipt of bids.
5.5	**Not Applicable.**
7	No further instructions.
8.1	**Subcontracting is allowed.**

8.4	No further instruction
9.1	The **DOE** will hold a Pre-Bid Conference on **8:00AM on 05 November 2026** at the **DOE-EUMB Conference Room** which shall be open to prospective Bidders. You may refer to the link provided to confirm your participation and attendance.  **https://forms.office.com/r/ZUBry2BKSJ?origin=lprLink**
10.1	The Procuring Entity's address is: Procurement Management Division G/F DOE Annex Bldg., Energy Center, Rizal Drive cor. 34th Street, Bonifacio Global City, Taguig City, Philippines 1632
12.4	The ABC is **Php160,500,820.00.** Any bid with a financial component exceeding the amount shall not be accepted.
13.1(a)(iv)	**No incidental services are required.**
13.1(b)(i)	**The price of the Goods shall be quoted DDP at:** **DOE Main Bldg., Energy Center, Rizal Drive cor. 34th Street** **Bonifacio Global City, Taguig City,** **Philippines 1632**
13.1(b)(ii)	**No incidental services are required.**
13.2	No further instructions.
14.1(b)	**The Bid prices for Goods supplied from outside of the Philippines shall be quoted in Philippine Peso.**
14.3	**No further Instruction**
15.1	Bids will be valid for **one hundred twenty (120)** days from bid opening.

16.1	The Bid Security shall be in the form of a Bid Securing Declaration, **or** any of the following: **1) The amount of not less than 2% of ABC if Bid Security is in cash;** **2) The amount of not less than 2% of ABC, if Bid Security is in manager's check;** **3) The amount of not less than 5% of ABC, if Bid Security is irrevocable LoC; or** 4) **The amount of not less than 5% of ABC, if Bid Security is Surety Bond.**
16.2	The Bid Security shall be valid until **19 March 2027.**
16.3	Substitution of the bid security is not allowed
19	The address for the submission of Bids is: **Annex Lobby** **Procurement Management Division** **Department of Energy** **G/F-Annex Building, Energy Center** **Rizal Drive cor. 34th Street, Bonifacio Global City** **Taguig City, Philippines 1632** The deadline for the submission of Bids is on or before 8:00AM of **19 November 2026.**
22.1	The place of the bid opening is. **DOE- EUMB Conference Room** **3/F DOE Annex Bldg., Energy Center,** **Rizal Drive cor. 34th Street, Bonifacio Global City,** **Taguig City, Philippines 1632** The date and time of bid opening is on **9:00AM of 19 November 2026.**
22.2(b)	**Not applicable**
25.7	No further instructions.
26.3(b)(i)	The quality component shall be assessed on the basis of criteria with corresponding numerical weights, which may include qualitative, environmental, or social aspects linked to the subject matter of the contract. These may include any or a combination of the following: a) Quality and technical merit, including technical competence and a credible track record; b) Aesthetic and functional design and characteristics; c) Approach and methodology; d) Accessibility; e) Tools and equipment;

<table>
<tr><td></td><td>f) Social, environmental, economic, and innovative characteristics;
g) Organization, qualification, and experience of employees or staff assigned to perform the contract;
h) Ongoing contracts and work commitments;
i) After-sales service and technical assistance;
j) Delivery conditions, such as delivery period and delivery process;
k) Disposal measures; or
l) Other relevant criteria in relation to the subject Goods or Infrastructure Projects to be procured.</td></tr>
<tr><td>26.3(b)(iii)</td><td>Not applicable.</td></tr>
<tr><td>26.3(c)(i)</td><td>The corresponding numerical weights for MAB:
Not applicable.</td></tr>
<tr><td>26.5(a)</td><td>Partial bid is not allowed. The goods are grouped in a single lot and the lot shall not be divided into sub-lots for the purpose of bidding, evaluation, and contract award.

In all cases, the NFCC computation, if applicable, must be sufficient for all the lots or contracts to be awarded to the Bidder.</td></tr>
</table>

Lot	Item	Location	Approved Budget Contract (ABC)
Procurement for the Supply, Delivery, Installation, and Commissioning of:			
1	EVCS for Cluster 1 – Region II	2	₱ 8,675,720.00
2	EVCS for Cluster 2 – Region II	3	₱ 13,013,580.00
3	EVCS for Cluster 3 – Region III	3	₱ 13,013,580.00
4	EVCS for Cluster 4 – Region III	1	₱ 4,337,860.00
5	EVCS for Cluster 5 – NCR – 1	3	₱ 13,013,580.00
6	EVCS for Cluster 6 – NCR and Region IV-A	3	₱ 13,013,580.00
7	EVCS for Cluster 7 – NCR – 3	3	₱ 13,013,580.00
8	EVCS for Cluster 8 – Region IV-A	1	₱ 4,337,860.00
9	EVCS for Cluster 9 – Region IV-A	4	₱ 17,351,440.00
10	EVCS for Cluster 10 – Region V	4	₱ 17,351,440.00
11	EVCS for Cluster 11 – Region V	2	₱ 8,675,720.00
12	EVCS for Cluster 12 – Region V	2	₱ 8,675,720.00
13	EVCS for Cluster 13 – Region VI	3	₱ 13,013,580.00
14	EVCS for Cluster 14 – Region VIII	3	₱ 13,013,580.00
	TOTAL	**37**	**₱160,500,820.00**

<table>
<tr><td>26.5(b)</td><td>Arithmetical correction is allowed.</td></tr>
<tr><td>26.6</td><td>No further instructions.</td></tr>
<tr><td>27.1</td><td>No additional requirements on Licenses or permits.</td></tr>
<tr><td>30.3(f)</td><td>No additional contract documents is required.</td></tr>
<tr><td>31.2</td><td>Not Applicable.</td></tr>
<tr><td>31.3</td><td>The Performance Security shall be in the form:
<table>
<tr><th>Form of Performance Security</th><th>Amount of Performance Security (Not less than the Percentage of the Total Contract Price)</th></tr>
<tr><td>a. Cash or Cashier’s or Manager’s check issued by a bank.

For biddings conducted by LGUs, the Cashier’s or Manager’s check may be issued by other banks certified by the BSP as authorized to issue such financial instrument.</td><td rowspan="2">Five percent (5%)</td></tr>
<tr><td>b. Bank draft or guarantee or irrevocable Letter of Credit issued by a local bank. If issued by a foreign bank, it shall be confirmed or authenticated by a local bank.</td></tr>
<tr><td>c. Surety bond callable upon demand issued by a surety or insurance company duly certified by the IC as authorized to issue such security.</td><td>Thirty Percent (30%)</td></tr>
</table></td></tr>
</table>

Section IV. General Conditions of Contract

Notes on the General Conditions of Contract

The GCC in Section IV, read in conjunction with the SCC in Section V and other documents listed therein, should be a complete document expressing all the rights and obligations of the parties.

The GCC herein shall not be altered. Any changes and complementary information which may be needed shall be introduced only through the SCC in Section V.

Table of Contents

Section IV. General Conditions of Contract..... 53

1) ..... General Terms 56

2) ..... Corrupt, Fraudulent, Collusive, and Coercive Practices 56

3) ..... Inspection and Audit by the Funding Source 56

4) ..... Governing Law and Language 56

5) ..... Notices 56

6) ..... Scope of Contract 57

7) ..... Subcontracting 57

8) ..... Procuring Entity's Responsibilities 58

9) ..... Prices 58

10) ..... Advance Payment 58

11) ..... Payment 59

12) ..... Taxes and Duties 60

13) ..... Performance Security 60

14) ..... Use of Contract Documents and Information 60

15) ..... Standards 61

16) ..... Inspection and Tests 61

17) ..... Warranty 62

18) ..... Delays in the Supplier's Performance 62

19) Liquidated Damages 63
20) Settlement of Disputes 63
21) Liability of the Supplier 64
22) Termination for Breach of Contract 64
23) Termination Due to Force Majeure 64
24) Termination for Convenience 65
25) Termination for Unlawful Acts 66
26) Procedures for Termination of Contracts 66
27) Assignment of Rights 68
28) Amendment to Order 68
29) Application 68

Section V. Special Conditions of Contract 69

2) General Terms

In this Contract, the following terms shall be interpreted as indicated:

a) "The Procuring Entity" means the organization purchasing the Goods, as named in the **SCC**.

b) "The Supplier" means the individual contractor, manufacturer distributor, or firm supplying/manufacturing the Goods and Services under this Contract and named in the **SCC**.

c) The "Funding Source" means the organization named in the **SCC**.

d) "The Project Site" where applicable, means the place or places named in the **SCC**.

3) Corrupt, Fraudulent, Collusive, and Coercive Practices

Unless otherwise provided in the **SCC**, the Procuring Entity as well as the Bidders, Contractors, or Suppliers shall observe the highest standard of ethics during the procurement and execution of this Contract. Further the Funding Source, as appropriate, will seek to impose the maximum civil, administrative, and/or criminal penalties available under the applicable law on individuals and organizations deemed to be involved with any of the practices mentioned in ITB Clause 3.1(a).

4) Inspection and Audit by the Funding Source

The Supplier shall allow the Funding Source to inspect its accounts and records related to the performance of its obligations. If the Funding Source requires a separate audit, it shall appoint its auditor and bear the cost thereof.

5) Governing Law and Language

4.1 This Contract shall be interpreted in accordance with the laws of the Republic of the Philippines.

4.2 This Contract has been executed in the English language, which shall be the binding and controlling language for all matters relating to the meaning or interpretation of this Contract. All correspondence and other documents pertaining to this Contract exchanged by the parties shall be written in English.

6) Notices

5.1 Any notice, request, or consent required or permitted to be given or made pursuant to this Contract shall be in writing. Any such notice, request, or consent shall be deemed to have been given or made when received by the concerned party, either in person or through an authorized representative of the Party to whom the communication is addressed, or when sent by registered mail or electronic mail, to such Party at the address specified in the **SCC**, which shall be effective when delivered and duly received, as may be applicable.

5.2 A Party may change its address upon notice pursuant to the provisions listed in the **SCC.**

7) Scope of Contract

6.1 The Goods to be provided shall be as specified in Section VI. Schedule of Requirements.

6.2 This Contract shall include all such items, although not specifically mentioned, that can be reasonably inferred as being required for its completion as if such items were expressly mentioned herein. Any additional requirements for the completion of this Contract shall be provided in the **SCC**.

8) Subcontracting

7.1 For subcontracting arrangements, the following rules shall apply for both locally-funded projects and projects financed through Official Development Assistance, except those covered by treaty, or international, or executive agreements.

a) The subcontracted portion of the contract shall be subject to the approval of the HoPE and the following conditions:

i) The subcontracted portion shall not exceed twenty percent (20%) for Goods, or a different percentage on a per project basis, as approved by the GPPB. The threshold percentages fixed herein shall be subject to the periodic review and adjustments as may be deemed appropriate by the GPPB; and

ii) The subcontracted portion shall be limited to components that are not deemed "significant or material" to the Project, as determined by the Procuring Entity.

b) Subcontracting arrangement, if allowed, including the time of submission of the eligibility documents of the subcontractor, shall be disclosed in the Bidding Documents;

c) Subcontractors must meet the eligibility criteria and submit the same eligibility documents as the general contractor.

Failure of a subcontractor to meet the eligibility criteria does not affect the eligibility of the general contractor for the procurement project. In such case, the portion intended to be subcontracted to the ineligible subcontractor shall be assumed by the general contractor;

d) The general contractor shall remain liable for the subcontractor’s actions, defaults, delays, and negligence;

e) The general contractor and the subcontractor are obliged to comply with the provisions of the contract and shall share liability, jointly and severally, in cases of violation of safety standards or other labor standards insofar as the subcontracted portion is concerned; an

f) For purposes of post-qualification in accordance with its objective and process under the IRR, the value of the entire completed and accepted Project, including the subcontracted portion, shall be credited as experience of the general contractor. In the case of the subcontractor, the following rules shall apply:

i) The subcontractor shall get credit for one hundred percent (100%) of the value of the subcontracted portion of the project performed; and

ii) Subcontractors shall be eligible to concessional windows of GFIs that treat receivables from the government as loan security; the receivables of subcontractors due from their general contractor shall similarly be accepted as loan security by GFIs.

9) Procuring Entity's Responsibilities

8.1 Whenever the performance of the obligations in this Contract requires that the Supplier obtain permits, approvals, import, and other licenses from local public authorities, the Procuring Entity may assist the Supplier in complying with such requirements in a timely and expeditious manner.

8.2 The Procuring Entity shall pay all costs involved in the performance of its responsibilities in accordance with the Scope of Contract.

10) Prices

9.1 For goods and services covered under this Contract, as awarded, all bid prices shall be deemed fixed and not subject to price escalation during contract implementation, except as otherwise provided in the succeeding provisions.

9.2 Prices charged by the Supplier for Goods delivered and/or services performed under this Contract shall not vary from the prices quoted by the Supplier in its bid, unless there is a change in price resulting from Amendment to Order issued in accordance with **GCC**

9.3 Clause 28.

11) Advance Payment

10.1 For Goods sourced from within the Philippines, advance payments may be made as follows:

a) A single advance payment not to exceed fifty percent (50%) of the contract amount shall be allowed for contracts entered into by a Procuring Entity for the following services where the requirement of down payment is a standard industry practice: 1) hotel and restaurant services; 2) use of conference/seminar and exhibit areas; and 3) lease of office space;

b) Advance payment not to exceed fifteen percent (15%) of the contract amount, unless otherwise directed by the President, shall also be allowed for procurement of goods required to address contingencies arising from natural or man-made calamities in areas where a "State of Calamity" has been declared by appropriate authorities; and

c) Upon submission of an irrevocable Letter of Credit (LoC) or bank guarantee issued by local bank, advance payment not exceeding fifteen percent (15%) of the contract amount shall be allowed and paid to the Supplier within sixty (60) calendar days from the signing of the contract. The irrevocable LoC or bank guarantee, which must be for an equivalent amount, shall remain valid until the goods are delivered, and accompanied by a claim for advance payment.

10.2 For Goods supplied from abroad, unless otherwise indicated in the **SCC**, the terms of payment shall be as follows:

a) Upon Contract Signing: Fifteen Percent (15%) of the Contract Price shall be paid within sixty (60) days from signing of the Contract and upon submission of a claim and a bank guarantee for the equivalent amount valid until the Goods are delivered and in the form provided in Section VIII. PBD Related Forms.

b) Upon Delivery: Sixty-five percent (65%) of the Contract Price shall be paid to the Supplier within sixty (60) days after the date of receipt of the Goods and upon submission of the documents (i) through (vi) specified in the SCC provision on Delivery and Documents.

c) Upon Acceptance: The remaining twenty percent (20%) of the Contract Price shall be paid to the Supplier within sixty (60) days after the date of submission of the acceptance and inspection certificate for the respective delivery issued by the Procuring Entity's authorized representative. In the event that no inspection or acceptance certificate is issued by the Procuring Entity's authorized representative within forty-five (45) days of the date shown on the delivery receipt, the Supplier shall have the right to claim payment of the remaining twenty percent (20%) subject to the Procuring Entity's own verification of the reason(s) for the failure to issue documents (vii) and (viii) as described in the SCC provision on Delivery and Documents.

10.3 All progress payments for Goods shall first be charged against the advance payment until the latter has been fully exhausted.

12) Payment

11.1 Payments shall be made only upon a certification by the HoPE that the Goods have been delivered in accordance with the terms of this Contract and have been duly inspected and accepted**.** Except with the prior approval of the President, no payment shall be made for services not yet rendered or for supplies and materials not yet delivered under the Contract.

11.2 The Supplier's request(s) for payment shall be made to the Procuring Entity in writing, accompanied by an invoice describing, as appropriate, the Goods delivered and/or Services rendered, and by documents submitted

pursuant to the SCC provision for **GCC** Clause 6.2, and upon fulfillment of other obligations stipulated in this Contract;

11.3 Pursuant to **GCC** Clause 11.2, payments shall be made promptly by the Procuring Entity after submission of an invoice or claim by the Supplier. Payments shall be in accordance with the applicable accounting and auditing laws, rules and regulations.

11.4 Unless otherwise provided in the **SCC**, all payments to the Supplier under this Contract shall be in Philippine Peso;

11.5 Unless otherwise provided in the **SCC**, payments using LoC is allowed. For this purpose, the amount of provisional sum shall be indicated in the **SCC**. All charges for the opening of the LoC and/or incidental expenses thereto shall be for the account of the Supplier.

13) Taxes and Duties

The Supplier, whether local or foreign, shall be entirely responsible for all the necessary taxes, stamp duties, license and permit fees, and other such levies imposed for the completion of this Contract.

14) Performance Security

13.1 Within ten (10) calendar days from receipt of the Notice of Award from the Procuring Entity, but in no case later than the signing of the contract by both parties, the successful Bidder shall furnish the performance security in any the forms prescribed in the ITB Clauses 31.2 and 31.3.

13.2 The performance security posted in favor of the Procuring Entity shall be forfeited in the event it is established that the winning Bidder is in default in any of its obligations under the contract.

13.3 The performance security shall remain valid until issuance by the Procuring Entity of the Certificate of Final Acceptance.

13.4 The performance security may be released by the Procuring Entity and returned to the Supplier after the issuance of the Certificate of Final Acceptance, subject to the following conditions:

a) There are no pending claims against the Supplier or the Surety Company filed by the Procuring Entity;

b) The Supplier has no pending claims for labor and materials filed against it; and

c) Other terms specified in the **SCC**.

13.5 The Procuring Entity shall allow a proportional reduction in the original performance security in case of a reduction in contract value, provided that any such reduction is more than ten percent (10%) and that the aggregate of such reductions is not more than fifty percent (50%) of the original performance security.

15) Use of Contract Documents and Information

14.1 The Supplier shall not, without the Procuring Entity's prior written consent, disclose this Contract or any specification, plan, drawing, pattern, sample, or information furnished by or on behalf of the Procuring Entity, except for purposes of performing the obligations therein. Any such disclosure shall be made in confidence and shall extend only as far as may be necessary for purposes of such performance.

14.2 Other than this Contract, any document enumerated in **GCC** Clause 14.1 shall remain the property of the Procuring Entity. All copies shall be returned to the Procuring Entity upon completion of the Supplier's performance under this Contract, if so required by the Procuring Entity.

16) Standards

The Goods provided under this Contract shall conform to the standards mentioned in the Section VII. Technical Specifications. When no applicable standard is mentioned, the Goods shall comply with the latest authoritative standards appropriate to its country of origin.

17) Inspection and Tests

16.1 The Procuring Entity or its representative shall have the right to inspect and/or to test the Goods to confirm their conformity to the Contract specifications at no extra cost to the Procuring Entity, other than that specified under Item 16.3 below. The **SCC** and Section VII. Technical Specifications shall specify what inspections and/or tests the Procuring Entity requires and where they are to be conducted. The Procuring Entity shall notify the Supplier in writing, in a timely manner, of the identity of any representatives retained for these purposes.

16.2 If applicable, the inspections and tests may be conducted on the premises of the Supplier or its subcontractor(s), at point of delivery, and/or at the goods' final destination. If conducted on the premises of the Supplier or its subcontractor(s), all reasonable facilities and assistance, including access to drawings and production data, shall be furnished to the inspectors at no cost to the Procuring Entity. The Supplier shall provide the Procuring Entity with the results of such inspections and tests.

16.3 The Procuring Entity or its designated representative shall be allowed to attend the tests and/or inspections referred to in this Clause provided that the Procuring Entity shall bear all of its own costs and expenses incurred in connection with such attendance including, but not limited to, all traveling and board and lodging expenses.

16.4 The Procuring Entity shall reject the Goods or any part thereof that fail any test and/or inspection or do not conform to the specifications. The Supplier shall either rectify or replace such rejected Goods or parts thereof or make alterations necessary to meet the specifications at no cost to the Procuring Entity. Upon giving due notice to the Supplier pursuant to **GCC** Clause 5, the test and/or inspection may be repeated by the Procuring Entity, at no additional cost.

16.5 The Supplier agrees that neither the execution of a test and/or inspection of the Goods or any part thereof, nor the attendance by the Procuring Entity

or its representative to the said test and/or inspection, shall release the Supplier from any warranties or other obligations under this Contract.

18) Warranty

17.1 The Supplier warrants that the Goods supplied under the Contract are new, unused, of the most recent or current models, and with all recent improvements in design and materials, except when the technical specifications required by the Procuring Entity provides otherwise.

17.2 The Supplier further warrants that all Goods supplied under this Contract shall have no defect, arising from design, materials, or workmanship or from any act or omission of the Supplier that may develop under normal use of the supplied Goods in the conditions prevailing in the country of final destination.

17.3 To ensure correction of manufacturing defects, the Supplier shall be required to provide a warranty for a minimum period specified in the **SCC**. At the option of the Procuring Entity, the obligation for the warranty shall be covered by:

a) Retention money in an amount equivalent to at least one percent (1%) but not to exceed five (5%) of every progress payment; or

b) Special bank guarantee equivalent to at least one percent (1%) but not to exceed five (5%) of the total Contract Price; or

c) Other such amount, if so specified in the **SCC**.

17.4 The said amounts shall only be released by the Procuring Entity after the lapse of the warranty period as specified in the **SCC**, or in case of Expendable Supplies, after the consumption thereof; Provided, however, that the Supplies delivered are free from patent and latent defects and all the conditions imposed under this Contract have been fully met.

17.5 The Procuring Entity shall promptly notify the Supplier in writing of any claims arising under the warranty. Upon receipt of such notice, the Supplier shall, within the period specified in the **SCC**, repair or replace the defective Goods or parts thereof, at the soonest possible time, without cost to the Procuring Entity.

17.6 If the Supplier, after having been notified on the warranty claim, fails to remedy the defect(s) within the period specified in **GCC** Clause 17.5, the Procuring Entity may proceed to take such remedial action as may be necessary, at the Supplier's risk and expense, and without prejudice to any other rights which the Procuring Entity may have against the Supplier under the Contract and other applicable laws.

19) Delays in the Supplier's Performance

18.1 Delivery of the Goods and/or performance of Services shall be made by the Supplier in accordance with the time schedule prescribed by the Procuring Entity in Section VI. Schedule of Requirements.

18.2 If at any time during the performance of this Contract, the Supplier encounters conditions that may impede the timely delivery of the Goods and/or performance of Services, the Supplier shall promptly notify the Procuring Entity in writing of the fact of the delay, its likely duration and its cause(s). As soon as practicable after receipt of the Supplier's notice, and upon causes provided for under **GCC** Clause 23, the Procuring Entity shall evaluate the situation and, if warranted, extend the Supplier's time for performance, in which case the extension shall be ratified by the parties by amendment of Contract.

18.3 Except as provided under **GCC** Clause 23, any delay by the Supplier in the performance of its obligations shall render it liable to the imposition of liquidated damages pursuant to **GCC** Clause 19, unless an extension of time is agreed upon pursuant to **GCC** Clause 28.

20) Liquidated Damages

19.1 When the Supplier fails to satisfactorily deliver the Goods under the contract within the specified delivery schedule, inclusive of duly granted time extensions, if any, the Supplier, manufacturer, or distributor shall be liable for liquidated damages in an amount equal to one-tenth (1/10) of one percent (1%) of the cost of the delayed goods scheduled for delivery for every day of delay until such goods are finally delivered and accepted by the Procuring Entity.

19.2 The Procuring Entity need not prove that it has incurred actual damages to be entitled to liquidated damages. Such amount shall be deducted from any money due, or which may become due the supplier, manufacturer, or distributor, or collected from any securities or warranties posted by the supplier, manufacturer, or distributor, whichever is convenient to the Procuring Entity. In case the total sum of liquidated damages reaches ten percent (10%) of the total contract price, the Procuring Entity may rescind the contract and impose appropriate sanctions over and above the liquidated damages to be paid.

19.3 If delays are likely to be incurred beyond its control, the supplier, manufacturer, or distributor shall promptly notify the Procuring Entity in writing, providing details of the causes and duration of the expected delay. The Procuring Entity may, at its discretion, grant a time extension based on meritorious grounds, with or without the imposition of liquidated damages.

21) Settlement of Disputes

20.1 Any dispute arising from the implementation of a contract covered by the Act and the IRR shall primarily be resolved and settled amicably by mutual consultation or agreement.

20.2 In case of failure to settle dispute amicably, the parties may mutually agree in writing to resort to other modes of alternative dispute resolution (ADR) to promote efficiency in the procurement process. Accordingly, they are encouraged to select the most expeditious mode of ADR available.

If arbitration is chosen as the ADR method, this shall be incorporated as a provision in the contract and referred to the Arbitrator specified in the **SCC.**

20.3 In case of disagreement or after exhausting the remedies provided in the preceding Section, the dispute may be submitted to arbitration or other forms of ADR which includes mediation, conciliation, early neutral evaluation, mini-trial, or any combination thereof in accordance with the provisions of RA No. 9285, otherwise known as the "Alternative Dispute Resolution Act of 2004."

20.4 Should the Parties fail to resolve their dispute or difference by such mutual consultation or agreement after thirty (30) days, either the Procuring Entity or the Supplier may signify its intention to commence arbitration by giving notice to the other Party, as hereinafter provided, as to the matter in dispute, and no arbitration in respect of this matter may be commenced unless such notice is given.

20.5 Any dispute or difference in respect of which a notice of intention to commence arbitration has been given in accordance with this Clause shall be settled by arbitration. Arbitration may be commenced prior to or after delivery of the Goods under this Contract.

20.6 Notwithstanding any reference to arbitration herein, the Parties shall continue to perform their respective obligations under the Contract unless otherwise agreed upon in writing.

22) Liability of the Supplier

21.1 The Supplier's liability under this Contract shall be as provided by the laws of the Republic of the Philippines, subject to additional provisions, if any, set forth in the **SCC**.

21.2 Except in cases of criminal negligence or willful misconduct, and in the case of infringement of patent rights, if applicable, the aggregate liability of the Supplier to the Procuring Entity shall not exceed the total Contract Price, provided that this limitation shall not apply to the cost of repair or replacement of the defective Goods.

23) Termination for Breach of Contract

The Procuring Entity may terminate for breach of contract when the Supplier fails to deliver or perform any or all of the Goods within the period(s) specified in the contract, or within any extension thereof granted by the Procuring Entity, pursuant to a request made by the Supplier prior to the delay, and such failure amounts to at least ten percent (10%) of the contract price, consistent with the provision of this IRR on liquidated damages. The Procuring Entity may likewise impose appropriate sanctions therein.

24) Termination Due to Force Majeure

23.1 For purposes of this Contract, the terms "*force majeure*" and "fortuitous event" may be used interchangeably. In this regard, a fortuitous event or *force majeure* shall be interpreted to mean as an event which the Supplier could not have been foreseen, or though foreseen, was inevitable. It shall not include ordinary unfavorable weather conditions, and any other causes

the effect/s of which could have been avoided with the exercise of reasonable diligence by the Supplier. Such events may include, but not limited to, acts of the Procuring Entity in its sovereign capacity, wars or revolutions, fires, floods, epidemics, quarantine restrictions, and freight embargoes.

23.2 The Procuring Entity may terminate this Contract and impose liquidated damages when, as a result of *force majeure*, the Supplier is unable to deliver or perform any or all of the Goods, amounting to at least ten percent (10%) of the Contract Price, for a period of not less than sixty (60) calendar days, or earlier, as deemed necessary by the Procuring Entity, after receipt of the written notice from the Procuring Entity stating that the circumstance of *force majeure* is deemed to have ceased.

23.3 The Supplier shall not be subject to forfeiture of its performance security, payment of liquidated damages, or contract termination due to *force majeure,* provided that the Supplier's delay in performance or other failure to perform its obligations under this Contract is the result of a *force majeure*.

23.4 If a *force majeure* situation arises, the Supplier shall promptly notify the Procuring Entity in writing of such condition and the cause thereof. Unless otherwise directed by the Procuring Entity, the Supplier shall continue to perform its obligations under the Contract as far as may be practicable, when not prevented by the *force majeure*, and shall seek all reasonable alternative means in the performance of its obligation.

25) Termination for Convenience

24.1 The Procuring Entity, through a written notice sent to the Supplier, may terminate this Contract, in whole or in part, at any time, if it has determined the existence of any of the following conditions that make contract implementation economically, financially, or technically impractical or unnecessary:

a) When physical and economic conditions have significantly changed so as to render the project no longer economically, financially, or technically feasible, as determined by the HoPE;

b) When the HoPE has determined the existence of conditions that make project implementation impractical or unnecessary, such as, but not limited to, fortuitous event/s, changes in laws, and government policies;

c) When funding for the Project has been withheld or reduced by higher authorities through no fault of the Procuring Entity; or

d) Any circumstance analogous to the foregoing.

24.2 The Goods that have been performed or are ready to be delivered or performed within thirty (30) calendar days after the Supplier's receipt of Notice to Terminate shall be accepted by the Procuring Entity at the

contract terms and prices thereof. For Goods not yet delivered, performed and/or ready to be delivered or performed, the Procuring Entity may elect:

a) To have any portion delivered and/or performed and paid at the contract terms and prices thereof; or

b) To cancel the remainder and pay to the Supplier an agreed amount for partially completed and/or performed goods and for materials and parts previously procured by the Supplier.

26) Termination for Unlawful Acts

25.1 The Procuring Entity may terminate this Contract in case it is determined *prima facie* that the Supplier, including any joint venture partner therein, has engaged, before or during the implementation of this Contract, in unlawful deeds and behaviors relative to contract acquisition and implementation. Unlawful acts include, but are not limited to, the following:

a) Corrupt, fraudulent, collusive, and coercive practices as defined in ITB Clause 3.1;

b) Drawing up or using forged documents;

c) Using adulterated materials, means or methods, or engaging in production contrary to rules of science or the trade; and

d) Any other act analogous to the foregoing.

27) Procedures for Termination of Contracts

26.1 The following provisions shall govern the procedures for termination of this Contract:

a) **Verification** - Upon receipt of a written report of acts or causes which may constitute grounds for termination as aforementioned, or upon its own initiative, the End-User or Implementing Unit shall, within a period of seven (7) calendar days, verify the existence of such grounds and cause the execution of a Verified Report, with all relevant evidence attached.

b) **Notice to Terminate** - Upon recommendation by the End-User or Implementing Unit, the HoPE shall terminate contracts only by written notice to the supplier conveying the termination of the contract. The notice shall state:

i) That the contract is being terminated for any of the grounds aforementioned, and a statement of the acts that constitute the grounds constituting the same;

ii) The extent of termination, whether in whole or in part;

iii) An instruction to the Supplier, to show cause as to why the contract should not be terminated; and

iv) Special instructions of the Procuring Entity, if any.

The Notice to Terminate shall be accompanied by a copy of the Verified Report.

c) **Show Cause** - Within a period of seven (7) calendar days from receipt of the Notice of Termination, the Supplier shall submit to the HoPE a verified position paper stating why the contract should not be terminated. If the Supplier, fails to show cause after the lapse of the seven (7) day period, either by inaction or by default, the HoPE shall issue an order terminating the contract.

d) **Rescission of Notice of Termination** - The Procuring Entity may, at any time before receipt of the Supplier's verified position paper, withdraw the Notice to Terminate if it is determined that certain items or works subject of the notice had been completed, delivered, or performed before the Supplier's receipt of the notice.

e) **Decision** - Within a non-extendible period of ten (10) calendar days from receipt of the verified position paper, the HoPE shall decide whether or not to terminate the contract. It shall serve a a written notice to the Supplier of its decision and, unless otherwise provided, the contract is deemed terminated from receipt of the Supplier of the notice of the decision. The termination shall only be based on the grounds stated in the Notice to Terminate.

f) **Contract Termination Review Committee (CTRC)** - The HoPE may create a committee to assist in the discharge of its functions under the IRR. All decisions recommended by the CTRC shall be subject to the approval of the HoPE.

g) **Take-over of Contracts -** If a Procuring Entity terminates the contract due to default, insolvency, or for a cause, it may enter into a Negotiated Procurement (Take-over of Contracts) pursuant to Section 35(c) of RA No. 12009.

h) **Procuring Entity's Options in Termination for Convenience in Contracts for Goods** - The Goods that have been performed or are ready for delivery within thirty (30) calendar days after the supplier's receipt of Notice to Terminate shall be accepted by the Procuring Entity at the contract terms and prices. For Goods not yet performed or ready for delivery, the Procuring Entity may elect:

i) To have any portion delivered or performed and paid at the contract terms and prices; or

ii) To cancel the remainder and pay to the supplier an agreed amount for partially completed or performed goods and for materials and parts previously procured by the supplier.

28) Assignment of Rights

The Supplier shall not assign its rights or obligations under this Contract, in whole or in part, except upon prior written consent of the Procuring Entity.

29) Amendment to Order

No variation in or modification of the terms of this Contract shall be made except by written amendment signed by the parties in accordance with the provisions on Amendment to Order, subject to applicable laws, rules and regulations.

30) Application

These General Conditions shall apply to the extent that they are not suspended by the provisions from other parts of this Contract.

Section V. Special Conditions of Contract

The provisions of this Section complement the GCC, specifying contractual requirements linked to the special circumstances of the Procuring Entity, the Procuring Entity's country, the sector, and the Goods purchased. In preparing this Section, the following aspects should be checked:

a) Information that complements provisions of Section IV must be incorporated.

b) Amendments and/or supplements to provisions of Section IV, as necessitated by the circumstances of the specific purchase, must also be incorporated.

Special Conditions of Contract

GCC Clause	
1(a)	The Procuring Entity is **DOE.**
1(b)	The Supplier is **as indicated in the Notice to Proceed.**
1(c)	The Funding Source is: 2.1 The GoP through the source of funding as indicated below for **CY2026** in the amount of **Php160,500,820.00.** 2.2 The source of funding is: **a) NEP, the National Expenditure Program.**
1(d)	The Project Site is at **DOE Main Office, Energy Center, Rizal Drive cor. 34th Street, Bonifacio Global City, Taguig City**
2	No further instructions.
5.1	The Procuring Entity's address for Notices is: **DOE Annex Building, Energy Center, Rizal Drive cor. 34th Street, Bonifacio Global City, Taguig City** The Supplier's address for Notices is: **As indicated in the Submitted Bidding Documents**
5.2	No further instructions.
6.2	**Delivery and Documents** For purposes of this Contract, "EXW," "FOB," "FCA," "CIF," "CIP," "DDP" and other trade terms used to describe the obligations of the parties shall have the meanings assigned to them by the current edition of INCOTERMS published by the International Chamber of Commerce, Paris. The Delivery terms of this Contract shall be as follows: *For Goods Supplied from Abroad, state "*The delivery terms applicable to the Contract are DDP delivered *[insert place of destination].* In accordance with INCOTERMS." (DAP) *For Goods Supplied from Within the Philippines, state "*The delivery terms applicable to this Contract are delivered *[insert place of destination].* Risk and title will pass from the Supplier to the Procuring Entity upon receipt and final acceptance of the Goods at their final destination." Delivery of the Goods shall be made by the Supplier in accordance with the terms specified in Section VI. Schedule of Requirements. The details of shipping and/or other documents to be furnished by the Supplier are as follows:

	For Goods supplied from within the Philippines: Upon delivery of the Goods to the Project Site, the Supplier shall notify the Procuring Entity and present the following original documents to the Procuring Entity: i) Supplier's invoice showing the goods' description, quantity, unit price, and total amount; ii) Delivery receipt/note, railway receipt, or truck receipt; iii) Supplier's factory inspection report; iv) Manufacturer's and/or Supplier's warranty certificate; v) Certificate of origin (for imported Goods); vi) Delivery receipt detailing number and description of items received signed by the authorized receiving personnel; vii) Certificate of Acceptance/Inspection Report signed by the Procuring Entity's representative at the Project Site; and viii) Four copies of the Invoice Receipt for Property signed by the Procuring Entity's representative at the Project Site. *For goods supplied from abroad:* Upon shipment, the Supplier shall immediately communicate and notify the Procuring Entity and the insurance company the full details of the shipment, including Contract Number, description of the goods, quantity, vessel, bill of lading number and date, port of loading, date of shipment, port of discharge etc. Upon delivery to the Project Site, the Supplier shall notify the Procuring Entity and present the following original documents as applicable with the documentary requirements of any letter of credit issued taking precedence: i) Supplier's invoice showing the goods' description, quantity, unit price, and total amount; ii) Negotiable, clean shipped on board bill of lading marked "freight prepaid", as well as a copy of the non-negotiable bill of lading; iii) Supplier's factory inspection report; iv) Manufacturer's and/or Supplier's warranty certificate; v) Certificate of origin (for imported goods); vi) Delivery receipt detailing number and description of items received signed by the Procuring Entity's representative at the Project Site; vii) Certificate of Acceptance/Inspection Report signed by the Procuring Entity's representative at the Project Site; and viii) Invoice Receipt for Property signed by the Procuring Entity's representative at the Project Site.

	For purposes of this Clause the Procuring Entity's Representative at the Project Site is **Mr. Patrick T. Aquino, CESO III (Director, EUMB).** **Incidental Services** The Supplier is required to provide all of the following services, including additional services, if any, specified in Section VI. Schedule of Requirements: ***any of the requirements:*** a) performance or supervision of onsite assembly and/or startup of the supplied goods; b) furnishing of tools required for assembly and/or maintenance of the supplied goods; c) furnishing of a detailed operations and maintenance manual for each appropriate unit of the supplied goods; d) performance or supervision or maintenance and/or repair of the supplied goods, for a period of time agreed by the parties, provided that this service shall not relieve the Supplier of any warranty obligations under this Contract; and e) training of the Procuring Entity's personnel, at the Supplier's plant and/or on-site, in assembly, start-up, operation, maintenance, and/or repair of the supplied goods. The Contract price for the goods shall include the prices charged by the Supplier for incidental services and shall not exceed the prevailing rates charged to other parties by the Supplier for similar services. **Packaging** The Supplier shall meet packaging standards for goods in accordance with existing laws and regulations, and as indicated in this Contract to prevent damage or deterioration during transit to their final destination. The packaging shall be durable enough to withstand rough handling, exposure to extreme temperatures, salt, precipitation, open storage, and other extreme conditions during transit. Packaging case sizes and weights shall consider the remoteness of the goods' final destination and the potential absence of heavy handling facilities at all transit points. The packaging, labeling, and documentation within and outside the packages shall comply strictly with special requirements as shall be expressly provided for in this Contract, including additional requirements, specified below, and in any subsequent instructions ordered by the Procuring Entity. The outer packaging must be clearly marked on at least four (4) sides as follows:

	Name of the Procuring Entity Name of the Supplier Contract Description Final Destination Gross weight Any special lifting instructions Any special handling instructions Any relevant Hazardous Chemical classifications A packaging list identifying the contents and quantities of the package is to be placed on an accessible point of the outer packaging, if practical. Otherwise, the packaging list is to be placed outside the secondary packaging. **Insurance** The Supplier shall fully insure the goods supplied under this Contract in a currency, local or tradeable and accepted by the *Bangko Sentral ng Pilipinas* against loss or damage incidental to manufacture, acquisition, transportation, storage, and delivery. The risk and ownership of the goods remain with the Supplier until their final acceptance by the Procuring Entity, unless otherwise specified in this Contract. **Transportation** The Supplier shall arrange and pay for the delivery of the goods, with the cost included in the Contract Price. When required under this Contract to deliver the goods CIF, CIP, or DDP, the Supplier shall ensure the transport of the goods to the port of destination or any other specified place of destination in the Philippines, as indicated in this Contract. The Supplier shall arrange for transport, insurance, and storage to the specified destination with the related costs included in the Contract Price. When required under this Contract to transport the goods to a specified place of destination within the Philippines, defined as the Project Site. The goods must be transported using carriers registered in the Philippines when the Supplier is required under this Contract to deliver the goods CIF (Cost, Insurance, and Freight), CIP (Carriage and Insurance Paid To), or DDP (Delivered Duty Paid). If no Philippine-registered carrier is available, the goods may be shipped using a non-Philippine carrier, provided the Supplier obtains and presents certification from the nearest Philippine consulate at the port of dispatch. If Philippine-registered carriers are available but their schedules would impede timely delivery or cause delays in the Supplier's performance of this Contract, the period of delay from when

	the goods were first ready for shipment to the actual date of shipment will be considered *force majeure* in accordance with **GCC** Clause 23. The Procuring Entity accepts no liability for the damage of goods during transit other than those prescribed by INCOTERMS for DDP Deliveries. In the case of goods supplied from within the Philippines or supplied by domestic Suppliers, risk and ownership will not be deemed transferred to the Procuring Entity until their receipt and final acceptance at the final destination. **Patent Rights** The Supplier shall indemnify the Procuring Entity against all third-party claims of infringement of patent, trademark, or industrial design rights arising from use of the goods or any part thereof.
10.3	The terms of payment shall be as follows: **-stated in the TOR.**
11.4	Payment shall be made in **Philippine Peso.**
11.5	Payment using LoC is not allowed
13.4(c)	**Release of Performance Security will be made upon request of the Supplier with all the supporting documents required under the government budgeting, accounting and auditing rules.**
16.1	The inspections and tests that will be conducted are: **As required under the TOR.**
17.3	*If the goods pertain to Expendable Supplies:* Three (3) months after acceptance by the Procuring Entity of the delivered goods or after the goods are consumed, whichever is earlier. *If the goods pertain to Non-expendable Supplies:* One (1) year after acceptance by the Procuring Entity of the delivered goods. The period for correction of defects in the warranty period is: ***as stated in the Terms of Reference (TOR).***
17.3	**Not Applicable.**
17.4	**Not Applicable.**
17.5	No further instructions.
20.2	Not applicable
21.1	No further instructions.

Section VI. Schedule of Requirements

Lot	Item	Location	Approved Budget Contract (ABC)	Delivery Schedule
Procurement for the Supply, Delivery, Installation, and Commissioning of:				
1	EVCS for Cluster 1 – Region II	2	₱ 8,675,720.00	One Hundred Fifty (150) calendar days upon receipt of Notice to Proceed (NTP)
2	EVCS for Cluster 2 – Region II	3	₱ 13,013,580.00	
3	EVCS for Cluster 3 – Region III	3	₱ 13,013,580.00	
4	EVCS for Cluster 4 – Region III	1	₱ 4,337,860.00	
5	EVCS for Cluster 5 – NCR – 1	3	₱ 13,013,580.00	
6	EVCS for Cluster 6 – NCR and Region IV-A	3	₱ 13,013,580.00	
7	EVCS for Cluster 7 – NCR – 3	3	₱ 13,013,580.00	
8	EVCS for Cluster 8 – Region IV-A	1	₱ 4,337,860.00	
9	EVCS for Cluster 9 – Region IV-A	4	₱ 17,351,440.00	
10	EVCS for Cluster 10 – Region V	4	₱ 17,351,440.00	
11	EVCS for Cluster 11 – Region V	2	₱ 8,675,720.00	
12	EVCS for Cluster 12 – Region V	2	₱ 8,675,720.00	
13	EVCS for Cluster 13 – Region VI	3	₱ 13,013,580.00	
14	EVCS for Cluster 14 – Region VIII	3	₱ 13,013,580.00	

Section VII. Technical Specifications

Reference to brand name shall not be allowed except for reasons of technical compatibility, interoperability, servicing, maintenance, or preservation of supplier warranty in order to keep the performance, functionality, and useful life of the equipment, in which case, the Procuring Entity shall indicate the reasons or justifications for availing of the exception as part of the Technical Specifications, Scope of Work, or Terms of Reference, as the case may be.

Where appropriate, drawings, including site plans as required, may be furnished by the Procuring Entity with the Bidding Documents. Similarly, the Supplier may be requested to provide drawings or samples either with its Bid or for prior review by the Procuring Entity during contract execution.

Bidders are also required, as part of the Technical Specifications, to complete their statement of compliance demonstrating how the items comply with the specification.

TERMS OF REFERENCE/ SPECIFICATION

Bidder's Statement of Compliance

(Re-Bidding) Supply, Delivery, Installation and Commissioning of Electric Vehicle Charging Stations (EVCS) for FY 2026

ABC: Php160,500,820.00

Lot	Item	Location	Approved Budget Contract (ABC)
Procurement for the Supply, Delivery, Installation, and Commissioning of:			
1	EVCS for Cluster 1 – Region II	2	₱ 8,675,720.00
2	EVCS for Cluster 2 – Region II	3	₱ 13,013,580.00
3	EVCS for Cluster 3 – Region III	3	₱ 13,013,580.00
4	EVCS for Cluster 4 – Region III	1	₱ 4,337,860.00
5	EVCS for Cluster 5 – NCR – 1	3	₱ 13,013,580.00
6	EVCS for Cluster 6 – NCR and Region IV-A	3	₱ 13,013,580.00
7	EVCS for Cluster 7 – NCR – 3	3	₱ 13,013,580.00
8	EVCS for Cluster 8 – Region IV-A	1	₱ 4,337,860.00
9	EVCS for Cluster 9 – Region IV-A	4	₱ 17,351,440.00
10	EVCS for Cluster 10 – Region V	4	₱ 17,351,440.00
11	EVCS for Cluster 11 – Region V	2	₱ 8,675,720.00
12	EVCS for Cluster 12 – Region V	2	₱ 8,675,720.00
13	EVCS for Cluster 13 – Region VI	3	₱ 13,013,580.00
14	EVCS for Cluster 14 – Region VIII	3	₱ 13,013,580.00
	TOTAL	**37**	**₱160,500,820.00**

I. RATIONALE

DOE Department Circular No. DC2019-11-0014, or the Implementing Rules and Regulations of RA 11285 (EEC-IRR), mandates the expansion of the Government Energy Management Program (GEMP) to include all government entities, agencies, and local government units (LGUs), requiring them to procure energy-efficient vehicles such as EVs as replacements for existing or aging fleets.

Furthermore, under the Electric Vehicle Industry Development Act (EVIDA) and the Comprehensive Roadmap for the Electric Vehicle Industry (CREVI), provisions have been established for the designation of dedicated parking slots equipped with EV charging stations (EVCS) in both private and public buildings or establishments. CREVI also sets specific targets for the adoption of EVCS, with short-term priorities focusing on pilot implementations of EV and EVCS rollout projects.

The DOE will deploy EVCS in DOE and government-owned facilities located in highly urbanized cities in the Philippines to support the targets indicated in the CREVI. The EVCS that will be purchased and installed will serve that purpose and can even be used by other EV users of other LGUs/government entities or other private EVs (to be charged with charging fees) to help with range anxiety of would-be owners of EVs and address the lack of EV charging infrastructure in public areas and buildings. This is also in consonance/compliance with Section 11.e of the EVIDA IRR, which states that the DOE shall implement, together with the Department of Transportation (DOTr) and Department of Trade and Industry (DTI), plans and programs pursuant to Section 7(a) of the EVIDA through information, education, communication, and demonstration campaigns consistent with the CREVI.

II. TECHNICAL SPECIFICATIONS

Specifications	
Locations:	*See Annex A*
Mode 4 EVCS, 60kW (DC)	
General	
Rated Power	60 kW or higher
Number of User Terminal	One (1) for each electric charging system
Display Language	English
Number of charging cable	At least two (2) cables
Charging Interface	CCS Combo 2

Mode 3 EVCS, 22kW (AC)	
General	
Rated Power	22kW or higher
Number of User Terminal	One (1) for each electric charging system
Display Language	English
Number of charging cable	One (1) cable
Charging Interface	Type 2
Other requirements for the EVCS:	
General	
Certification	The charging equipment must have the Philippine Standard (PS) Mark and Import Commodity Clearance (ICC) Sticker
Casing	Anti-corrosion painted steel or equivalent
Ingress Protection	At least IP54
Charging Cable Length	At least 5 meters
Connectivity	Capable of connecting to the internet. With a one (1)-year internet subscription, which can be through direct connection to the equipment or wireless connection.
Communication protocol	Open Charge Point Protocol (OCPP) 2.0 or higher
Interconnectivity module	Shall be equipped with an interconnectivity module, including a payment system through existing payment methods such as electronic payment, credit and debit cards, among others.
Diagnostic	Built-in Diagnostics
Protective Function	
Electrical Protection	Over current protection, surge protection, ground fault detection, and leakage detection
Safety device	On/Off Switch and Emergency Stop Button

Structural/Station Shed/Canopy	
Roofing	A metal roof that can withstand the additional load for the crystalline-type solar PV panels and wind speed range of 120 km/h to 180 km/h
Foundation	Concrete slab foundation with pedestal and parking curb
Design	Shall be submitted to End-user for review and approval. For conceptual design, see Annex A.
Other inclusion	- Two (2) Steel Pipe Guards for each EVCS - At least two (2) metal signages leading to the charging stations for each location (fixed and movable) - Other necessary signage based on the submitted design plan.
Solar PV System	Provision and installation of a Crystalline-type Solar PV system with a minimum 3kWp power rating. This includes the necessary electrical wiring system, inverter, charge controller, and electricity submeter, and other necessary materials based on the approved plans.
Warranty	Shall provide a minimum of twelve (12) months warranty on the EVCS, including both hardware and software, as well as electrical appurtenances such as conductors, circuit breakers, and panel enclosures, and all related services, and the solar PV system. The warranty shall commence upon the final acceptance of the Project.
Installation	- Civil works and electrical works necessary to install all equipment and chargers; - Include a separate meter/sub-meter and circuit breaker for each charging equipment per location, and a solar PV system, including its connection and integration

Electrical System Upgrade	The EVCS Provider shall process and shoulder the upgrade of the existing electrical system to a 3-Phase connection for the operation of the EVCS, including the non-refundable bill deposit that will be required by the DU. Such upgrades shall comply with all applicable laws, regulations, codes, standards, and DU requirements. The EVCS Provider is allowed to undertake any of the following upgrade options: - Installation of a dedicated transformer, which may be pole-mounted or pad/floor-mounted, as appropriate; or - Upgrading, replacement, or capacity enhancement of the existing transformer serving the facility where the EVCS will be connected. The selected upgrade option shall provide sufficient capacity to meet the operational requirements of the EVCS and shall not affect the safety, reliability, or performance of the existing electrical system. This includes the application to the respective Cooperative/Distribution Utility (DU), supply and delivery of the transformer, and other necessary electrical materials.	
Safety Measures	Provision and installation of the following for each location: - One (1) unit of high-definition CCTV System - One (1) unit of 9kg Lithium-Ion Extinguishers (Class L/AVD), including its enclosure and cabinets	
Documents / User's Manual	Instruction Manual for Operation and Maintenance in English version	

1. The EVCS Provider shall submit, together with its bid proposal, the Manufacturer's Catalog Data of the proposed equipment for EVCS - Product Brochure with technical specifications of the AC and DC Charger. The EVCS equipment that will be supplied and installed shall be strictly consistent with the specific model/s proposed during the submission of the bid.

   To ensure timely deployment, the bidder shall submit a Certificate of EVCS Equipment Availability and Certificate as Authorized Distributor of the EVCS, verifying that the units are available and ready for installation.

   Absence of these documents shall be grounds for disqualification to bid.

2. Any malfunctions, defects, or faults identified within the warranty period shall be repaired within 15 calendar days. Should the defect can not be repaired within the timeframe, the affected EVCS and/or solar PV system component shall be replaced immediately at no cost to the End-User.

3. The EVCS Provider shall submit the following items for approval during the inception meeting with the End-user:

    a. Timeline of the project implementation (Construction/Work schedule, including projected manpower requirement)
    b. Proposed EVCS design in front, side, and perspective view)
    c. Contractor's All Risk Insurance (CARI) shall be submitted to the End-user on or before mobilization of the workers.

III. SCOPE OF WORK

Under this project, the EVCS Provider shall conduct and provide the following provisions:

A. Preliminary Coordination and Planning

1. Conduct a kick-off/inception meeting with the End-user to discuss the following:
    a. Introduction of the EVCS Providers' Project Team, consisting of the Team Lead and Technical and Administrative personnel, who will handle the Project. In the event that the EVCS Provider has been awarded multiple Lots/Projects, the EVCS Provider shall provide a dedicated Project Team per Lot/Project.
    b. Timeline of the project implementation for each location (Gantt Chart), including the conduct of site inspection until the commissioning and turnover.
    c. Proposed design and layout of EVCS
    d. Specifications of the EVCS consistent with the requirements under DOE DC2023-05-011.

    The EVCS Provider shall submit the following items for approval during the inception meeting with the End-user:

    a. List of Project Team composition per Lot/Project
    b. Timeline of the project implementation (Construction/Work schedule, including projected manpower requirement)
    c. Proposed EVCS design in front, side, and perspective view)
    e. Contractor's All Risk Insurance (CARI) shall be submitted to the End-user on or before mobilization of the workers.

2. Conduct coordination meetings and site inspections with representatives from the End-user, respective beneficiary LGUs, and DUs of each location, and prepare minutes/highlights of the meetings indicating the agreements made during the meeting and site inspection.

   The EVCS Provider shall submit the minutes/highlights of the meeting to the End-user after each meeting is conducted.

3. Notify the End-user upon commencement of the installation and setting up of the EVCS for each location.

4. Conduct a progress meeting with the End-user, as requested, to present the updates and progress of the project for each location, following the format:

   a. Timeline
   b. Status of the installation (including photo documentation of site developments)
   c. Challenges experienced
   d. Next step/Way Forward

   The EVCS Provider shall prepare and submit the progress report to the End-user after each meeting is conducted.

B. Engineering Design and Documentation

1. Prepare and submit the plans/blueprints, including site development plan, electrical plan, mechanical plan, civil work plan, and architectural plan, and other layouts necessary for the execution of the project for each location to the End-user for review and subsequent approval.

2. Submit Bill of Materials (BOM) to the End-user for each location, consistent with the standard structural design of the EVCS. This includes electrical wires/cables, electrical wire conduits, electrical connections, circuit breakers, brackets, fasteners, and all necessary tools & equipment for the installation and set-up service of the chargers. The submitted BOM shall form part of the inspection checklist per location and acceptance requirements by the End-User.

C. Civil Works and Site Development

1. Carry out necessary works for the construction of the charging station, such as, but not limited to, setting up and closing of the area affected, preparation and concreting of the parking areas that can accommodate at least a four-wheeled vehicle (see annex for the

dimensions), electrical wiring that will be affected by the construction, and restoration of the EVCS area before commissioning activity.

2. Perform necessary civil works such as, but not limited to, excavation of foundations for the transformers and for the parking area where the EVCS will be installed, charger pedestal, roof/shade, and solar panel. The civil work shall also include gravel laying and bedding, compaction, concreting, and structural reinforcement for the EVCS parking area.

   Provide the installation of metal signage leading to and at the charging station. Refer to DC2023-05-0011 on the sample metal signage.

D. Electrical Works and Utility Interconnection

1. Installation of EVCS equipment in accordance with existing standards (Philippine Electrical Code), manuals, DOE DC2023-05-0011, and the IG on ORSI.
2. Installation of at least one (1) service outlet capable of safely servicing EV on-board chargers in all EVCS. The service outlet shall include a waterproof protective cover.
3. Provide and install the necessary service entrance transformers from the distribution utility line in coordination with the concerned DU, including all fees, security deposit (bill deposit), permits, approvals, taxes, and processes required by the DU.
4. Provide and install a metal-enclosed Distribution Panel with an IP Rating of at least IP30 and 3P Main and Branch MCCB.
5. Provide the necessary cables for a maximum length of one hundred (100) meters from the power source to the transformers to the distribution board to the chargers, including an independent breaker and meter/sub-meter for each piece of equipment in each location.
6. Provide and install a roof/awning with a crystalline-type Solar PV system equipped with at least three (3) kWp solar panels connected to the EVCS with a limiter, lighting, and fixtures. (*See Annex B of the sample layout*).
7. Provide and install general lighting. This includes LED lighting fixtures, weatherproof switches, conduits, and wiring devices.
8. Provide and install a CCTV system with at least one (1) high-definition 1920*1080P, 15FPS, 2MP camera with weatherproofing of at least IP67, and vandal-proofing at least IK10. The CCTV shall be integrated with the heat/smoke alarm system. The installation includes the cabling requirement from the EVCS to the respective LGU's data center.

E. Demonstration, Testing, and Commissioning

1. Prepare and submit to the End-user an Inspection Checklist consistent with the Annex C - EVCS Inspection Report of the IG on the ORSI and may consist of civil and electrical components as determined by the End-User before the testing activity.

2. Conduct inspection and testing prior to the operational commissioning, including the power tie-in to connect the EVCS to the Main Electrical Supply, based on the Inspection Checklist approved by the End-User.
3. Conduct an operational demonstration of the EVCS together with the beneficiary and representatives from the End-user.
4. Provide at least one (1) day of on-site training for at least 20 participants for each beneficiary and its focal representative who will handle the operation of the EVCS, which includes operation, troubleshooting, and preventive maintenance of the EVCS.
5. Provide Certificates to attendees and submit copies of the materials presented during the Training Session to the End-user.

F. Final Acceptance

1. Submit to the End-user the As-built Plans signed and sealed by Professional design Engineers.
2. Store in an external solid-state drive (SSD) and submit to the End-user the soft copies of all plans, layouts, and designs in .dwg, .pdf, .rvt, or other format used by the EVCS Provider. These plans should be organized by location.
3. Prepare and submit to the End-user the final project report, BOQ, and BOM.

IV. OTHER TERMS AND CONDITIONS

1. The EVCS Provider must also include in its bid the certification of after-sales service covering the EVCS (both software and hardware) and Solar PV System.

2. Bidders may bid for multiple lots, provided that their Net Financial Contracting Capacity (NFCC) is at least equal to the aggregated Approved Budget for the Contract (ABC) of all lots bid upon.

3. Bidders submitting proposals for multiple lots shall be required to submit a distinct Project Team composition for each lot (Annex C). To ensure the simultaneous implementation of all awarded lots, personnel assigned to one lot shall not be designated to another lot, except for the Project Team Leader, who may oversee multiple sites. For example, a bidder competing for two (2) lots

must submit two (2) independent project teams to ensure that each lot is implemented simultaneously by dedicated personnel.

Bidders shall submit the names and Curriculum Vitae (See attached CV Template) of the proposed Project Team lead and members, along with copies of their existing job contracts (notarized) with the bidder. These contracts must remain valid for the entire duration of the project's implementation. Non-submission of CV and notarized job contracts shall be grounds for disqualification.

4. All works shall be done in accordance with the DOE DC2023-05-0011, Implementing Guidelines on the Obligation of EVCS Provider, and EVCS Requirements, Specifications, and Interconnectivity (ORSI), and Occupational Health and Safety practices and related amendatory or subsequent policies or issuances.

5. The EVCS Provider may subcontract portions of the goods and services under this project. However, the subcontracted portion shall not exceed Twenty Percent (20%) of the total contract price. Moreover, the subcontractor shall be a DOE-Accredited EVCS Provider and shall submit necessary legal and financial eligibility together with the bidders' bid in compliance with RA 12009.

6. All winning bidders shall follow the standard color scheme and structure design for all of the EVCS, as specified by the End-User (see Annex B). The proposed EVCS design, including dimensions, layout and specifications, shall form part of the bid submission. Minor variations may be permitted, provided that such variation do not materially deviate from the overall appearance, functionality, and design as outline in Annex B. Non-submission of the proposed EVCS design shall be grounds for disqualification.

7. The price quoted should be firm and irrevocable, not subject to any change whatsoever, even due to increases in the cost of raw materials and components, fluctuations in foreign exchange rates, or changes in excise duties. Should the bid Goods be rendered obsolete or phased out by the manufacturer, the upgraded or newer version shall be delivered at no additional cost to the end-user.

   The Winning Bidder should warrant that all goods, vehicles, equipment, parts, and components shall be brand-new (unused), not cloned nor imitation whatsoever, and if found so, shall be replaced immediately with no additional cost to DOE.

8. The End-User shall not provide any accommodation/transportation for the engineers/representatives for attending commissioning and demonstration work. It is the absolute responsibility of the EVCS Provider to make their own arrangements.

9. For purposes of evaluating the Single Largest Completed Contract (SLCC), projects considered similar shall be those involving the supply, installation, testing, commissioning, and integration of EVCS infrastructure, power distribution systems, renewable energy systems, or other electrical installations with a minimum connected load of 60kW, completed within three (3) years before the deadline for the submission of bid, such as the following:

a. Supply, delivery, installation, testing, and commissioning of EVCS;

b. Supply and delivery of electric vehicles (EVs) bundled with the installation, testing and commissioning of EVCS;

c. Installation, upgrading, testing, and commissioning of electrical systems or equipment with a connected load of at least 60kW;

d. Installation and commissioning of renewable energy systems integrated with energy storage systems;

e. Electrical works associated with commercial, industrial, government, or institutional facilities involving the installation of power distribution protection, monitoring, and control systems with a connected load of at least 60kW; and

f. Supply, delivery, and installation of crystalline-type solar PV system for a system with at least 60kW load.

V. ELIGIBILITY

1. The EVCS Provider must be an Accredited EVCS Provider and shall provide and submit all the necessary government permits and licenses in performing their obligations under this document.

    a. *EVCS Provider Accreditation - Supplier and Service Certificate*
    b. *Valid Mayor's/Business Permit*
    c. *PhilGEPS certification*
    d. *BIR Registration*
    e. *Income Tax Return (ITR)*
    f. *Audited Financial Statement Documents*

2. The EVCS Provider must be legally incorporated or organized as legal entity under Philippines' existing laws and regulations.

3. The EVCS Provider shall include photographs of previously completed EVCS projects and a technical brochure of the offered EVCS equipment in their bid submission. The EVCS equipment supplied and will be installed shall be strictly consistent with the specific models proposed during the submission of the bid or the latest model of the EVCS.

    Non-submission of this requirement shall be grounds for disqualification.

VI. DELIVERY TERMS

1. The delivery period of the Goods shall be within one hundred fifty (150) calendar days or five (5) months upon receipt of the approved Notice to Proceed (NTP).

2. The delivery and installation of the EVCS shall be located at the identified sites in Annex A of this TOR.

VII. SCHEDULE OF PAYMENT

Deliverables	Schedule of deliverables upon receipt of Notice to Proceed	Requirement for payment	PAYMENT SCHEDULE
1. Inception meeting, Pre-built site development plan *(electrical plan, mechanical plan, civil work plan and architectural plan), and applicable construction permits (building permit, etc.)*	45 calendar days	End-user Acceptance Certificate, Approved Inception Report, and approved pre-built site developme nt plans	25%
2. Installed EVCS and constructed a canopy with Solar PV system, and submitted project status report	120 calendar days	End-user Acceptance Certificate, Project status report	45%
3. Energization, testing, commissioning, and operationalization of the EVCS with Solar PV system, with submitted project status report	140 calendar days	End-user Acceptance Certificate, Project status report	15%

4. Submission of Final Plans *(electrical plan, mechanical plan, civil work plan and architectural plan)***, conduct of Training and Handing Over**	150 calendar days	Training Certificate, & Final Project Acceptance Certificate, soft copies, and signed and sealed as-built plan	15%
		TOTAL	**100%**

Five percent (5%) of the total contract price shall be deducted as a retention fee for warranty. The retention money is refundable upon the expiration of the one (1) year warranty period of EVCS and its components.

VIII. INSPECTION AND TESTING

The End-User may reject any Goods or any part thereof that fail to pass any tests and/or inspections or do not conform to the specifications as specified in this TOR. The Winning Bidder shall immediately rectify or replace such rejected Goods or parts thereof.

IX. WARRANTY

The EVCS Provider shall provide one (1) year warranty on the parts and components of EVCS (replacement of the whole EVCS or repair and component parts), which will commence after signing the Final Acceptance Certificate of the End-user. The Service Provider shall warrant that all components are new, of first-class quality, according to specifications, and free from defects. The defects, if any, shall be rectified or replaced free of charge.

X. REPAIR AND MAINTENANCE

The End-User or the Beneficiary shall notify the EVCS Provider in writing whenever repairs need to be done and shall act and conduct the assessment within one (1) day/three (3) days upon receipt of the notice. The repair and maintenance shall be completed within the maximum period of three (3) days/seven (7) days. Should the repair/maintenance require longer period, the end-user should be notified in writing of the reason and the completion period which is subject for approval/concurrence with replacement as may be required.

Annex A

Clustered – EVCS locations

Cluster	Region	Location
1	Region II – Cagayan Valley	1. Tuguegarao, Cagayan
	Region II – Cagayan Valley	2. Tuguegarao, Cagayan
2	Region II – Cagayan Valley	3. Santiago City, Isabela
	Region II – Cagayan Valley	4. Ilagan City, Isabela
	Region II – Cagayan Valley	5. Santa Fe, Nueva Vizcaya
3	Region III – Central Luzon	6. San Jose City, Nueva Ecija
	Region III – Central Luzon	7. Cabanatuan City, Nueva Ecija
	Region III – Central Luzon	8. Cabiao, Nueva Ecija
4	Region III – Central Luzon	9. Capas, Tarlac
5	NCR – 1*	10. Quezon City
	NCR – 1*	11. Quezon City
	NCR – 1*	12. Manila City
6	NCR – 2*	13. Makati City
	Region IV-A – CALABARZON	14. Sta. Rosa City, Laguna
	Region IV-A – CALABARZON	15. Sta. Rosa City, Laguna
7	NCR – 3*	16. Pasig City
	NCR – 3*	17. Pasig City
	NCR – 3*	18. Taguig City
8	Region IV-A – CALABARZON	19. Siniloan, Laguna
9	Region IV-A – CALABARZON	20. Sariaya, Quezon
	Region IV-A – CALABARZON	21. Gumaca, Quezon

	Region IV-A – CALABARZON	22. Lopez, Quezon
	Region IV-A – CALABARZON	23. Tagkawayan, Quezon
10	Region V – Bicol Region	24. Sipocot, Camarines Sur
	Region V – Bicol Region	25. Naga City, Camarines Sur
	Region V – Bicol Region	26. San Jose, Camarines Sur
	Region V – Bicol Region	27. Caramoan, Camarines Sur
11	Region V – Bicol Region	28. Polangui, Albay
	Region V – Bicol Region	29. Daraga, Albay
12	Region V – Bicol Region	30. Sorsogon City, Sorsogon
	Region V – Bicol Region	31. Bulan, Sorsogon
13	Region VI – Western Visayas	32. Bacolod City, Negros Occidental
	Region VI – Western Visayas	33. Iloilo City, Iloilo
	Region VII – Central Visayas	34. Cebu City, Cebu
14	Region VIII – Eastern Visayas	35. Palo, Leyte
	Region VIII – Eastern Visayas	36. Ormoc City, Leyte
	Region VIII – Eastern Visayas	37. Maasin City, Southern Leyte

**Locations will be coordinated with the DOTr and respective Local Government Units (LGUs) to support the operation of electric PUVs along green routes.*

Note: The End-user may recommend other government-owned locations within the same Province if the initially identified site is found to be infeasible due to accessibility, right-of-way, environmental, safety, geopolitical, topographical, or other site-related constraints.

Annex B

EVCS Uniform Design

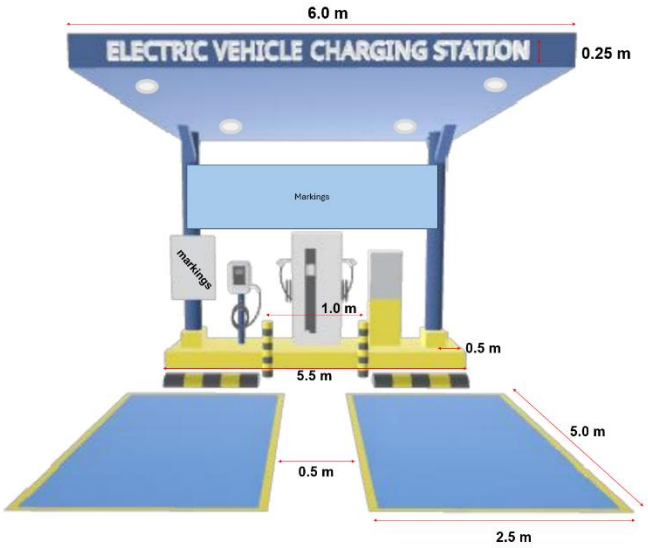

Details:
- **With 4 pcs of LED pin lights**
- **ACP cladding roof (4mm thick)**
- **PVC Ceiling**
- **With stainless steel gutter and drainpipes**

Dimensions indicated are approximate only

1 S-3 FRONT VIEW

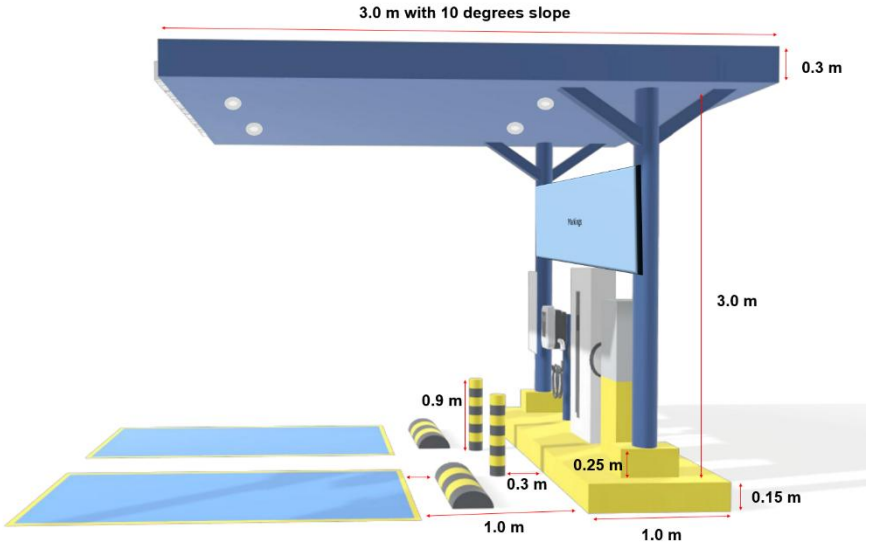

2 S-3 SIDE VIEW

Annex B (cont.)

EVCS Uniform Design



3
S-3
PERSPECTIVE VIEW

Other details:

EVCS Structure:	Specifications:	Others:
Color	Yellow – Pantone 116 C Blue – Pantone 279	
Roof:	• Dimension (approx.): 6m x 3m x 0.3m (HxLxW) • Materials: Roof Sheet Thickness: at least 0.40mm • Slope: 10 degrees	
Column	• Materials: Steel Column • Dimensions: - Depth: at least 153mm - Flange Width: at least 101mm - Flange Thickness: at least 7.0 mm - Web Thickness: at least 5.5 mm	
Ceiling	• Material: Aluminum Composite Panel (ACP) • Frame: lightweight galvanized iron (GI) metal furring channels • Dimension (approx.): 6m x 3m x 0.3m (HxLxW)	
Footing	• Material: Steel Bar • Dimension(approx.): 5-Ø16 Bottom Bars Continuous	
Base Plate	• Material: Steel Plate • Dimension (approx.): 350mm x 300mm x 12mm with 5-Ø16 A-307 Achor Bolts	
Pedestal	• Material: Steel rebar and Concrete • Dimension (approx.): 350 mm x 350 mm - Vert Bar: 10-Ø16 - Lateral Ties: 2L Ø 10 @ 250 mm • Supports: - 4L 2 sets Ø10 @50mm	

	- 4L 5 sets Ø10 @ 100mm	
LED Pinlight:		Sample picture:
Quantity	At least 12 pc (8 pcs for spares)	
Wattage	At least 15 Watts	
Illuminance Levels	100 to 300 lux	
Others	• With separate lighting switch (2 units perpendicular to the concrete aisle) • Shall be compliant with the Energy Conserving Design on Buildings	
EVCS Sign Display:		
Quantity	At least 30 letters	
Design	Individually built characters “ELECTRIC VEHICLE CHARGING STATION” lit by LED lights	
Dimension (approx.)	Letter: 25mm (H)	
Other	With separate light switch	
Display Cabinet:		Sample picture:
Quantity	At least 1 pc	
Dimension (approx.)	Frame: 24in x 12in x 2in (LxWxH) with acrylic glass	
Materials	Casing: Weather-resistant anodized aluminum Front opening: Shatterproof and yellowing-resistant acrylic panel	
Color	Frame: Black	

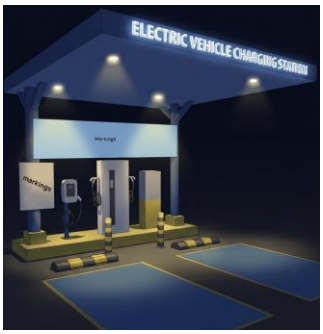



	Acrylic: Clear		
Security	With lock and provision for two (2) keys		
Other:	Properly mounted in the EVCS		
Panel Signage:		Sample Picture:	
Quantity	At least 1 pc		
Dimension (approx.)	Panel sheet: 50cm x 550cm (HxW) with tubular frame		
Materials	• Panel: Durable high-grade composite aluminum that can resist rust, weather, UV rays, and warping • Frame: Galvanized Iron (GI) or Mild Steel (MS) Tubes		
Thickness	• Panel: minimum of 0.3mm • Frame: minimum of 0.3mm		
Design	The end user shall provide the EVCS Provider with the design		
Directional Signages:		Sample Picture:	
Quantity	At least 2 pcs		
Dimension (approx.)	Post: 2.134m (7 feet) height and 75mm diameter Signage: 0.6m x 0.3m		
Materials	Post: Galvanized Iron (G.I.) Pipe Signage: Metal Sheet, reflective paint		
Concrete footing	0.2m x 0.2m footing 0.6m (2 feet) below ground level		
Color	Yellow – Pantone 116 C		

	Blue – Pantone 279	
Others	Signage is mounted on the metal post using brackets	
Design	Final design shall be provided by the End-User	
In-ground Mounted Bollards		Sample Picture: 
Quantity	At least 4 pcs	
Material	Water- and rust-resistant steel pipe (Carbon Steel), at least Schedule 40	
Dimensions (approx.)	Height: 1m above the pavement Outside Diameter: at least 10.5cm	
Footing	Depth: at least of 0.6m Dimension (approx.): 0.3m x 0.3m	
Color	Yellow – Pantone 116 C Black - Black 6 C	
Others	Filled with concrete for extra mass and impact resistance	
Parking Curbs:		Sample picture:  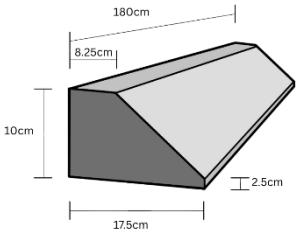
Quantity	2 pcs	
Material	Reinforced concrete or rubber parking curb	
Dimensions (approx.)	See image	
Color	Yellow – Pantone 116 C Black - Black 6 C	

Parking Markings:			
Dimension (approx.)	5x2.5m (LxW)		
Color (stripes)	Yellow – Pantone 116 C Blue – Pantone 279		
	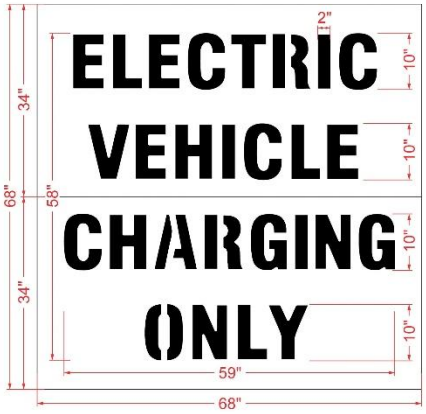		

Bill of Materials for Each Location

Item No.	Description		Quantity	Unit
A	**Solar PV Array Station**			
	A.1	PV Module 550 Wp (minimum)	6	Pcs
	A.2	Rapid Shutdown Device Tigo	6	Pcs
	A.3	RSS Transmitter Tigo	1	Lot
	A.4	Railings	1	Lot
	A.5	L Foot with Tek Screw	18	Pcs
	A.6	Enclosure	1	Pcs
	A.7	Splice Kit	16	Pcs
	A.8	Mid Clamp	8	Pcs
	A.9	End Clamp	8	Pcs
	A.10	Groundings Lugs	4	Pcs
	A.11	Bolts, Nuts and Washer	1	Lot
	A.12	MC4 Connector	1	Lot
	A.13	DC Raceways and Fittings	1	Lot
	A.14	DC Cables and Appurtenances	1	Lot
	A.15	DC Combiner box Nema 3X	1	Lot
	A.16	AC Cables and Appurtenances	1	Lot
	A.17	AC Raceway and Fittings	1	Lot
	A.18	AC Combiner box Nema 3X	1	Lot
	A.19	Others (Reserved as contingencies)	1	Lot
B	**Inverter Station**			
	B.1	Inverter 5 KW	1	Pc
	B.2	Inverter Master/ Controller	1	Pc
	B.3	Others (Reserved as contingencies)	1	Lot
C	**Tapping Point Station**			
	C.1	Transient Voltage Surge Suppressor (TVSS) Isolation Switch	1	Lot
	C.2	Power Meter with CT	1	Lot
	C.3	Electronic Circuit Breaker (ECB) Main Disconnect Switch	1	Pc
	C.4	Dry Type Transformer	1	Pc
	C.5	Service entrance cap 3" Threaded Type	1	Pc
	C.6	Service Entrance Eyebolt	1	Pc
	C.7	Rectangular KWHR Meter with Meter Base	1	Pc
	C.8	Cables	1	Lot
	C.9	Service Entrance Pedestal	1	Lot
	C.10	Construction of Concrete Encasement (40 Meters)	1	Lot

	C.11	AC Raceway and Fittings (Other Electrical Accessories)	1	Lot
	C.12	Others (Reserved as contingencies)	1	Lot
D	**Grounding System**			
	D.1	Grounding Cables	1	Lot
	D.2	Conduits and Fittings	1	Lot
	D.3	Ground Rod with Clamp 10ft 5/8	1	Lot
	D.4	Grounding Pit Cover	1	Lot
	D.5	Others (Reserved as contingencies)	1	Lot
E	**EV Charging Equipment**			
	E.1	At least 60kW DC EV charger, CCS Combo 2 connector, dual plug	1	Lot
	E.2	At least 22kW AC EV charger, Pole Mounted, Type 2 connector	1	Lot
F	**EV Charging Station**			
	F.1	Lighting and Convenience Outlet	1	Lot
	F.2	Equipment Pad	1	Lot
	F.3	EV Charging Station Shed/Canopy (Civil Works (6mx5m)		
	F.4	Pipe Guard, Parking Curb and Other Accessories	1	Lot
	F.5	CCTV system	1	Lot
G	**Electrical Panel**			
	G.1	Main Distribution Panel (MDP) AC Main Breaker: 250AT, 3P, 400V, 60 Hz; Branches: 1-200AT, 3P,400V, 60Hz.; 1-40AT,3P,400V,60Hz; 1-30AT,3P,400V,60Hz; 1-20AT,3P,400V, 6Hz. In Nema3R Enclosure	1	Lot
	G.2	Panel Box (Lighting and Power Outlet) Main: 20 AT,2P,230V, 6Hz in NEMA 3R Enclosure	1	Lot
H	**Others**			
	H.1	TVSS (Cartridge Type)	1	Lot
	H.2	AC Main Circuit Breaker (Capacity as installed Unit)	1	Lot
	H.3	Terminal Lugs	1	Lot
	H.4	Electrical Tape	1	Lot
	H.5	Cable Tie UV Resistant 12"	1	Lot
	H.6	Rubber Tape	1	Lot
	H.7	EV Charger Filter	1	Lot
	H.9	9kg Lithium-Ion Extinguishers (Class L/AVD), including its enclosure and cabinets	1	Lot
	H.10	Signages	1	Lot
	H.11	Other construction materials	1	Lot

Annex C

Project Team Composition Per Lot

Lot No.	Location	Proposed Project Team
3*	Cluster III - Cordillera Administrative Region (CAR): Bontoc, Mountain Province, Mankayan, Benguet, and Quirino, Quirino	Project Team Lead: Juan dela Cruz Technical manpower: *Specify* Other manpower: *Specify*
8*	Cluster VIII - Region V – Bicol Region: Polangui, Albay, Daraga, Albay, and Sorsogon City, Sorsogon	Project Team Lead: Dos dela Cruz Technical manpower: *Specify* Other manpower: *Specify*
	(include additional rows as necessary)	

**Sample only*

I Mr./Ms. ***<First Name M.I. Last Name>***, being the duly authorized representative of ***<Name the Bidder/Company>,*** hereby declare that the above composition shall be dedicated solely for specified Lot No. and shall comply with the set Terms of Reference.

We confirm that the lots listed above are arranged in order of preference and priority. Should our Single Largest Completed Contract (SLCC) and Net Financial Contracting Capacity (NFCC) be insufficient for the specific lots, we explicitly authorize to evaluate and consider our bids based on the End-User's recommendation.

This certification is issued for the purpose of complying with the bidding requirements for the procurement of Supply, Delivery, Installation, and Commissioning of Electric Vehicle Charging Stations.

Declared and certified by:

<First Name M.I. Last Name>

Signature over printer name of the

duly authorized representative

<Designation / Position Title>

<Name of Bidder / Company>

Date: _____

Note for the evaluation of SLCC:

1. ***Single SLCC for multiple bid lots*** *– If the bidder submits similar/one (1) SLCC applicable to all lots being bid, the SLCC shall be evaluated against the total aggregated Approved Budget for the Contract (ABC) of all such lots. The submitted SLCC must be at least fifty percent (50%) of the total aggregated ABC. If the SLCC does not satisfy the minimum 50% requirement of the total aggregated ABC, the number of bid lots to be considered shall be reduced accordingly until the total aggregated ABC of the remaining lots is covered by the submitted SLCC based on the 50% threshold. In the event that the bid lots will be reduced, the End-User may recommend the specific lot/s to be awarded to the bidder, subject to compliance with all other applicable bidding requirements and evaluation criteria.*

   Example: If a bidder submits bids for Lot 1 (ABC = PHP 5 million), Lot 2 (ABC = PHP 5 million), and Lot 3 (ABC = PHP 10 million), and submits a single SLCC amounting to PHP 7 million, the bidder's qualification shall be assessed based on the 50% SLCC requirement for the total aggregated ABC of the lots to be awarded.

   Since the total aggregated ABC of Lots 1, 2, and 3 is PHP 20 million, the required SLCC should be at least PHP 10 million (50% of PHP 20 million). As the submitted SLCC of PHP 7 million does not meet this requirement, the bidder may only be considered for a combination of lot(s) whose total aggregated ABC does not exceed PHP 14 million, such that the submitted SLCC remains equivalent to at least 50% of the aggregated ABC.

   Accordingly, the bidder may qualify for Lots 1 and 2 (aggregated ABC of PHP 10 million) or Lot 3 (ABC of PHP 10 million), as the submitted SLCC of PHP 7 million exceeds the required minimum SLCC of PHP 5 million for either option. The specific lot or lots to be awarded may be determined based on the recommendation of the End-User and the results of the bid evaluation. ss

2. ***Separate SLCC for each bid lots*** *– If the bidder submits distinct or separate SLCCs for each bid lot, each SLCC shall be evaluated independently against the ABC of the corresponding lot. Compliance with the 50% minimum requirement shall be determined on a per-lot basis.*

3. *The Bidder shall submit its SLCC consistent with the form and substance of the bidding documents pursuant to RA 12009-IRR.*

Annex D

Curriculum Vitae Template

LAST NAME, FIRST NAME M.I.

Job Title
Complete Address – Phone Number – Email Address

SUMMARY

Include a brief summary of experience, qualifications, and skills.

EXPERIENCE

Year
Job Title
Company
Address
Include any relevant work experience

Year
Job Title
Company
Address
Include any relevant work experience

Year
Job Title
Company
Address
Include any relevant work experience

EDUCATION

- *Include additional rows as necessary.*

TRAININGS RELATED TO EV CHARGING STATIONS

- *Include relevant training/s related to the installation of EV charging stations.*
- *Include additional rows as necessary.*

_____
SIGNATURE OVER PRINTED NAME

Note: Please attach copies of your existing job contracts (notarized) during the bid submission.

To download the template, you may scan this QR Code:



Annex E

EVCS Location Details

Cluster	Item No.	LGU	EVCS Locations / Address	Region	Latitude	Longitude	Requires Upgrade	Tapping Point Distance (in Meter)	CCTV Distance to Existing Establishment (in Meter)
1	1	Tuguegarao, Cagayan (Cayagan Provincial Capitol)	Cagayan Museum, Tuguegarao City	Region II	17.6116913	121.7309838	Yes	100	10.00
	2	Tuguegarao, Cagayan (Cayagan Provincial Capitol)	Cagayan Provincial Capitol Compound (Tuguegarao City)	Region II	17.6321000	121.7247000	Yes	100	10.00
2	3	Santiago City, Isabela	Fourlanes Plaza, Malvar, Santiago City	Region II	16.6870470	121.556987	Yes	100	85.00
	4	Ilagan City, Isabela	Rizal Avenue, Barangay San Vicente, Ilagan City, Isabela	Region II	17.14316° N (17° 8' 35" N)	121.8887° E (121° 53' 19" E)	Yes	100	
	5	Santa Fe, Nueva Vizcaya	24/7 Commercial Hub	Region II	120°56'23.53"E	16° 9'37.45"N	Yes	100	150.00
3	6	San Jose City, Nueva Ecija	Maharlika Highway, San Jose City, Nueva Ecija, ZIP Code 3121, Philippines	Region III	15.7923000	120.9888000	Yes	100	
	7	Cabanatuan City, Nueva Ecija	Magsaysay (Sangitan) Public Market, Brgy. Magsaysay Norte, Cabanatuan City	Region III	15°29'18.50"N	120°58'34.22"E	Yes	100	10.00
	8	Cabiao, Nueva Ecija	Cabiao Municipal Hall, Brgy. San Juan North, Cabiao, Nueva Ecija	Region III	15°15'08.7"N	120°51'36.4"E	Yes	100	20.00
4	9	Capas, Tarlac	D.A. Compound, Brgy. Cut-cut I, Capas, Tarlac	Region III	15° 18' 28.54" N	120° 34' 31.02" E	Yes	100	100.00
5	10	Quezon City	Amoranto Sports Complex located at 140 Don A. Roces Avenue, Brgy. Paligsahan, Diliman, Quezon City	NCR	14°37'47.6"N	121°01'23.8"E	Yes	100	15.00
	11	Quezon City	Department of Public Order and Safety Parking Area located at Gate 3, Quezon City Hall Compound, Kalayaan Avenue, Brgy. Central, Diliman, Quezon City	NCR	14.6464000	121.0501000	Yes	100	15.00
	12	Manila City	Manila City Hall	NCR	14.5904475	120.9812737	Yes	100	
6	13	Makati City	Makati City Hall, J. P. Rizal Street, Barangay Poblacion, Makati City	NCR	14.5703678	121.0269127	Yes	100	
	14	Sta. Rosa City, Laguna	Parking near City Hall Building D., Brgy. Malusak, City of Santa Rosa, Laguna	NCR	14°18'52.66"N	121° 6'45.60"E	Yes	100	15.00
	15	Sta. Rosa City, Laguna	Multi level Parking near City Hall Building B., Brgy. Market	NCR	14°18'54.22"N	121° 6'52 .94"E	Yes	100	15.00
7	16	Pasig City	SPED Linear Park, Caruncho, Pasig	NCR	14.5602600	121.0798800	Yes	100	
	17	Pasig City	E Rodriguez Jr Ave Service Road U-turn, Bagong Ilog, Pasig (area beneath E Rodriguez Jr Ave flyover)	NCR	14.5669300	121.0704600	Yes	100	
	18	Taguig City	People's Park located along JP Rizal	NCR	14.5646473	121.0562769	Yes	100	
8	19	Siniloan, Laguna	Brgy. Halayhayin, Siniloan, Laguna	Region IV-A	14.4286990	121.4634270	Yes	150	100.00
9	20	Sariaya, Quezon	Parking Space Near New Municipal Hall Sitio Balete Brgy. Sampaloc 2, Sariaya Quezon	Region IV-A	13.9570000	121.5137000	Yes	100	7.00
	21	Gumaca, Quezon	Municipal Compound, J.P. Rizal St., Brgy. Pipisik, Gumaca, Quezon	Region IV-A	13.9228430	122.0998180	Yes	100	50.00
	22	Lopez, Quezon	Municipal Building, Maharlika Highway corner Rosario Street, Brgy. Talolong, Lopez, Quezon	Region IV-A	13.88417° N (13° 53' 3" N)	122.25999° E (122° 15' 36" E)	Yes	100	
	23	Tagkawayan, Quezon	Tourist Rest Area, Quirino Highway, Brgy. Poblacion, Tagkawayan, Quezon	Region IV-A	13°57'53.328"N	122°32'35.694"E	Yes	100	10.00
10	24	Sipocot, Camarines Sur	South Centro, along AH26 (Maharlika Highway), 4408	Region V	13.7577900	122.9765100	Yes	100	

Cluster	Item No.	LGU	EVCS Locations / Address	Region	Latitude	Longitude	Requires Upgrade	Tapping Point Distance (in Meter)	CCTV Distance to Existing Establishment (in Meter)
			Sipocot, Camarines Sur, Philippines						
	25	Naga City, Camarines Sur	Raul S. Roco Library, City Hall Compound, J. Miranda Avenue	Region V	13.6267230	123.1985126	Yes	100	10.00
	26	San Jose, Camarines Sur	Pimentel 2 Building	Region V	13.6991100	123.5175410	Yes	150	50.00
	27	Caramoan, Camarines Sur	Brgy. Solnopan, Caramoan, Camarines Sur	Region V	13.7682440	123.8624100	Yes	100	20.00
11	28	Polangui, Albay	Polangui town proper, Albay (near LCC Mall Polangui, San Francisco Bridge)	Region V	13.2907700	123.4912800	Yes	100	
	29	Daraga, Albay	In front of BDO	Region V	13.1482770	123.7127610	Yes	100	21.50
12	30	Sorsogon City, Sorsogon (Sorsogon Provincial Capitol)	National Highway, Sorsogon City, Sorsogon	Region V	12.9707969	124.0010071	Yes	100	10.00
	31	Bulan, Sorsogon	New Municipal Compound, Brgy. Aquino, Bulan, Sorsogon	Region V	12.6991510	123.8752030	Yes	100	15.00
13	32	Bacolod City, Negros Occidental	Bacolod City Government Center, Circumferential Road, Brgy. Villamonte, Bacolod City, Negros Occidental	Region VI	10.6592968	122.9664673	Yes	100	50.00
	33	Iloilo City, Iloilo	Jaro Plaza- Plaza Rizal St, Jaro, Iloilo City, Iloilo	Region VI	10.7239204	122.558070	Yes	100	
	34	Cebu City, Cebu (Cebu Provincial Capitol)	Province of Cebu, Executive Building Parking Area	Region VI	10.3169563	123.8906315	Yes	100	10.00
14	35	Palo, Leyte	Montejo Sports Center, National Highway, Palo, Leyte	Region VIII	11.1584475	124.9908670	Yes	100	20.00
	36	Ormoc City, Leyte	Back of CSWD Annex, C.S. Mendiola St., Ormoc City	Region VIII	11.0125845	124.6054024	Yes	100	6.00
	37	Maasin City, Southern Leyte	Maasin City Hall Public Stage	Region VIII	10.1320101	124.8384085	Yes	150	50.00

Annex E

EVCS Location Details (Continuation)

Cluster	Item No.	LGU	Contact Information		
			Focal Person	Designation	Email Address
1	1	Tuguegarao, Cagayan (Cagayan Provincial Capitol)	Atty. Jay- Em Cuntpay Engr. Israel Ismael	Deputy Chief of Staff Engineer III	jm_cuntapay@cagayan.gov.ph, engrmhike07@gmail.com,
	2	Tuguegarao, Cagayan (Cagayan Provincial Capitol)			
2	3	Santiago City, Isabela	Engr. Benedict B. Panganiban	City Engineer and Building Official	cityengineering.lgusantiago@gmail.com, cristalancheta.1@gmail.com, victanchuajr007@gmail.com
	4	Ilagan City, Isabela	Reynolds Lora / Janice Marquez	City Admin	cityofilaganlgu@gmail.com, cityadmin@cityofilagan.gov.ph
	5	Santa Fe, Nueva Vizcaya	Bengio W. Segundo, EnP.	Municipal Planning and Development Coordinator	santafe.mpdc@gmail.com
3	6	San Jose City, Nueva Ecija	Jesus Mitra	LGU - Assessor	japz1225@gmail.com, piosanjosecity@gmail.com
	7	Cabanatuan City, Nueva Ecija	Engr. Elmer D. Mateo, EnP	City Planning and Development Coordinator	cabanatuan.cpdo@gmail.com
	8	Cabiao, Nueva Ecija	Ar. EnP. Raymundo Elpidio C. Lagman, Jr.	MPDC	lgucabiao.mpdo@gmail.com
4	9	Capas, Tarlac	Maria Cristina T. Mason	Executive Assistant II – External Affairs (Mayor's Office)	planningcapas@gmail.com
5	10	Quezon City	Myra Melora Rabe	Administrative Assistant I	gto.dpos@quezoncity.gov.ph
	11	Quezon City			
	12	Manila City			osec@manila.gov.ph, *cpdo@manila.gov.ph*
	13	Makati City	Engr. George William C. Hong	City Engineer and Energy Efficiency and Conservation Officer	depw@makati.gov.ph, eeco@makati.gov.ph
	14	Sta. Rosa City, Laguna	Boris B. Valeroso	EEC Focal Person/ Engineer I	borisbvaleroso@gmail.com
	15	Sta. Rosa City, Laguna			
7	16	Pasig City	Engr. Jhon Rhandy B. Cabanes	Officer-In-Charge, City Transportation Development and Management Office	jrcabanes@pasigcity.gov.ph, pasigtransport@pasigcity.gov.ph, cityadministrator@pasigcity.gov.ph
	17	Pasig City			
	18	Taguig City	William Francis S. Mariano	Mobility Office Head	williamfsmariano@gmail.com
8	19	Siniloan, Laguna	Quincy Adams Jamon Eleria	Municipal Administrator / Municipal Engineer	adamsjamoneleria@gmail.com

Cluster	Item No.	LGU	Contact Information		
			Focal Person	Designation	Email Address
9	20	Sariaya, Quezon	EnP. Ronny Lindog	MPDC	gilas.sariaya.quezon@gmail.com, sariayamunicipaladministrator@gmail.com, ronnie.lindog@yahoo.com
	21	Gumaca, Quezon	Engr. Aireen M. Ubas	Municipal Engineer	yves_aaron@yahoo.com
	22	Lopez, Quezon	Aristedes E. Arias	MPDC	ampdclopez@gmail.com, mayorsoffice_lopez@yahoo.com, sherkzrey@gmail.com
	23	Tagkawayan, Quezon	Francis M. Villanueva, EnP.	Municipal Planning and Development Coordinator	tkg.mpdc@gmail.com, omm@tagkawayan.gov.ph, omm_lgutagkawayan@yahoo.com
10	24	Sipocot, Camarines Sur	Bryan Joseph Reyes		sipocot.lgu@gmail.com
	25	Naga City, Camarines Sur	Engr. Junmar Rey B. Aguilar	Acting City Engineer	junmarreyaguilar@gmail.com, ceo.dh@naga.gov.ph, cmo@naga.gov.ph, lenirobredo@naga.gov.ph
	26	San Jose, Camarines Sur	Ar. Jeorge Kristian V. Lim, EnP.	Municipal Planning and Development Coordinator	lim.jeorgekristian@gmail.com
	27	Caramoan, Camarines Sur	Jovito Godofredo C Benigno	MPDC	mpdocaramoan@gmail.com, caramoanmunicipalengineering@gmail.com
11	28	Polangui, Albay			mjrs.lgupolangui@gmail.com
	29	Daraga, Albay	Hon. Leonides Teofilo C. De Lumen II	Municipal Councilor, Chairman, Committee Communications, Technology and Digital Innovation	lcdelumen88@gmail.com, lgu@daraga.gov.ph
12	30	Sorsogon City, Sorsogon (Sorsogon Provincial Capitol)			governor@sorsogon.gov.ph, arch.vlcardiente@gmail.com
	31	Bulan, Sorsogon	Engr. Toby C. Gonzales, Jr.	LGU - Municipal Engineer	municipalengineeringoffice.23@gmail.com
13	32	Bacolod City, Negros Occidental	Ms. Mary Jean Ramos		mayorggasataya@bacolodcity.gov.ph
	33	Iloilo City, Iloilo	Engr. Neil G. Ravena, MPM	General Services Offices	ravenaneil@gmail.com, iloilocmo2019@gmail.com, mistiocherryhope@gmail.com
	34	Cebu City, Cebu (Cebu Provincial Capitol)	Rodrigo Tanza Jr.		rstjr32969@yahoo.com
14	35	Palo, Leyte	Engr. Jadd Meyrick S. Agner	Municipal Engineer	palolgu.leyte@gmail.com
	36	Ormoc City, Leyte	Engr. Kevin Fiel E. Navarrete	Admin Asst. III / EEC Focal Person	vincekevin22@gmail.com, ormoccgso@gmail.com, lguormoccmo@gmail.com, cityad.ormoccity@gmail.com, planningormoc@gmail.com, ksolana.lguormoc@gmail.com
	37	Maasin City, Southern Leyte	Engr. Michael Esparcia	City Engineer	lgumaasincity@yahoo.com

Annex F

EVCS Location Pictures

NO.	NAME OF LGU	PICTURES
1.	Tuguegarao, Cagayan	 
2.	Tuguegarao, Cagayan	 
3.	Santiago City, Isabela	  
4.	Ilagan City, Isabela	
5.	Santa Fe, Nueva Vizcaya	  
6.	San Jose City, Nueva Ecija	

7.	Cabanatuan City, Nueva Ecija	  
8.	Cabiao, Nueva Ecija	 
9.	Capas, Tarlac	  

10.	Quezon City	 
11.	Quezon City	  
12.	Manila City	
13.	Makati City	

14.	Sta. Rosa City, Laguna	 
15.	Sta. Rosa City, Laguna	 
16.	Makati City	  
17.	Pasig City	 
18.	Taguig City	
19.	Siniloan, Laguna	  

20.	Sariaya, Quezon	  
21.	Gumaca, Quezon	
22.	Lopez, Quezon	
23.	Tagkawayan, Quezon	  
24.	Sipocot, Camarines Sur	
25.	Naga City, Camarines Sur	

26.	San Jose, Camarines Sur	  
27.	Caramoan, Camarines Sur	 
28.	Polangui, Albay	

29.	Daraga, Albay	  
30.	Sorsogon City, Sorsogon	
31.	Bulan, Sorsogon	 
32.	Bacolod City, Negros Occidental	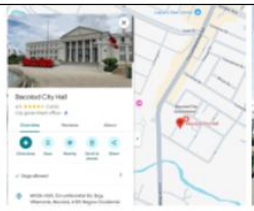 

33.	Iloilo City, Iloilo	  
34.	Cebu City, Cebu	 
35.	Palo, Leyte	  

36.	Ormoc City, Leyte	  
37.	Maasin City, Southern Leyte	

Section VIII. Philippine Bidding Document Related Forms

Notes to the Philippine Bidding Document Related Forms

The Bidder shall complete and submit with its Bid the **Bid Form** and **Price Schedules** in accordance with ITB Clause 13 with the requirements of the Bidding Documents and the format set out in this Section.

When requested in the BDS, the Bidder should provide the **Bid Security**, either in the form included hereafter or in another form acceptable to the Procuring Entity, pursuant to ITB Clause 16.

The **Contract Form** should incorporate any correction or modification to the accepted Bid resulting from price corrections when it is finalized at the time of contract award. The Price Schedule and Schedule of Requirements which form part of the contract should be modified accordingly.

The **Omnibus Sworn Statement** must be completed by all Bidders in accordance with ITB Clause 4.2. Failure to submit it with the Bid shall result in the rejection of the Bid and the Bidder's disqualification.

The **Performance Securing Declaration, if allowed and Bank Guarantee Form for Advance Payment** shall be completed only by the successful Bidder in accordance with one of the forms indicated herein by the Procuring Entity, and pursuant to **GCC** Clause 13 and its corresponding SCC provision.

TABLE OF CONTENTS

Bid Form for Procurement of Goods..... 115

Price Schedule for Goods Offered from Within the Philippines..... 117

Price Schedule for Goods Offered from Abroad 118

Contract Form..... 119

Omnibus Sworn Statement Form 122

Bid Securing Declaration Form 126

Additional Forms:

1. **STATEMENT OF ONGOING GOVERNMENT AND PRIVATE CONTRACTS INCLUDING CONTRACT AWARDED BUT NOT YET STARTED**
2. **STATEMENT OF SINGLE LARGEST COMPLETED CONTRACT**

Bid Form for Procurement of Goods

[Note: The duly accomplished form shall be submitted with the Bid]

BID FORM

Project Identification No.: *[Insert number]*

To: [Name of Procuring Entity]

Having examined the Philippine Bidding Documents (PBD) including the Supplemental Bid Bulletin Numbers [insert numbers], the receipt of which is hereby duly acknowledged, we, the undersigned, declare that:

a) I/We have no reservation to the PBD, including the Supplemental Bid Bulletins, for the Procurement Project [Project Title];

b) Select one, delete the other

- I/We undertake to deliver the Goods in accordance with the delivery schedule in the Schedule of Requirements;

- I/We offer to execute the Works for this Contract in accordance with the PBD;

c) The total price of our Bid in words and figures, excluding any discount offered below, is *[insert information]*

d) The discounts offered and the methodology for their application, if any, are: *[insert information];* or indicate N/A if no discount offered]

e) The total bid price in words and figures, after applying the applicable discount, includes the cost of all taxes, such as, but not limited to *[specify the applicable taxes, e.g. (i) value added tax (VAT), (ii) income tax, (iii) local taxes, and (iv) other fiscal levies and duties]*, which are itemized in the *[Select one, delete the other:* the Price Schedules/ Detailed Estimates].

f) This Bid shall remain valid within a period stated in the PBD, and it shall be binding upon me/us at any time before the expiration of that period;

g) If our bid is accepted, I/we commit to enter to a contract and provide a performance security in the form, amounts, and within the times prescribed in the PBD, and hereby acknowledge the consequences under the IRR of RA No. 12009 on forfeiture of Bid Security or enforcement of Bid Securing Declaration and on Blacklisting.

Until a formal Contract is prepared and executed, this Bid, together with your written acceptance thereof and your Notice of Award, shall be binding upon the Bidder.

I/We understand that you are not bound to accept the Lowest Calculated Bid or any Bid you may receive.

I/We certify/confirm that we comply with the eligibility requirements pursuant to the PBD.

The undersigned is authorized to submit the bid on behalf of [Name of the Bidder] as evidenced by the attached [State the Written Authority].

I/We acknowledge that failure to sign each and every page of this Bid Form, including the attached Schedule of Prices, shall be a ground for the rejection of our bid.

Duly authorized to sign the Bid for and behalf of:

[Insert Bidder's Name]

[Signature over Printed Name]
[Position/Designation]
[Date]

Price Schedule for Goods

Name of Bidder _____. Project ID No. _____. Page _ of _____

Pricing Details for Goods Offered from Within the Philippines

1	2	3	4	5	6	7	8	9	10
Item	Description	Source of Domestic Product, as certified by the Relevant Agency	Quantity	Unit price exw per item	Transportation and all other costs incidental to delivery, per item	Sales and other taxes payable if Contract is awarded, per item	Cost of Incidental Services, if applicable, per item	Total Price, per unit (col5+6+7+8)	Total Price delivered Final Destination (col 9)x(col 4)

Summary of Bid Prices

*The Procuring Entity may modify the table below as necessary to comply with the requirements of the Procurement Proje*ct.

1	2	3	4
Item No.	Item	Particulars / Description	Total Amount

Name:_____

Signature:_____

Duly authorized to sign the Bid for and behalf of:_____

Price Schedule for Goods

Name of Bidder _____. Project ID No. _____. Page _ of _____

Pricing Details for Goods Offered from Abroad

1	2	3	4	5	6	7	8	9
Item	Description	Country of origin	Quantity	Unit price CIF port of entry (specify port) or CIP named place (specify border point or place of destination)	Total CIF or CIP price per item (col. 4 x 5)	Unit Price Delivered Duty Unpaid (DDU)	Unit price Delivered Duty Paid (DDP)	Total Price delivered DDP (col 4 x 8)

Summary of Bid Prices

The Procuring Entity may modify the table below as necessary to comply with the requirements of a specific Project.

1	2	3	4
Item No.	Item	Particulars / Description	Total Amount

Name:_____

Signature:_____

Duly authorized to sign the Bid for and behalf of:_____

Contract Form

[Note: The duly accomplished form is not required to be submitted with the Bid but shall be submitted within ten (10) days after receiving the Notice of Award]

CONTRACT FOR [Insert Project Title]

This CONTRACT executed on the _____ day of _____ 20_____ by and between:

[Name of Procuring Entity], a government agency of the Republic of the Philippines, hereinafter called "the Entity";

-and-

[Name of Supplier /Contractor/ Consultant] a company duly organized and existing under the laws of [city and country], with principal office at [insert address], hereinafter called "the Supplier".

WHEREAS, the Entity invited Bids for certain goods and services/works/consulting services, particularly *[Brief description of Project]*;

WHEREAS, the Supplier/Contractor/Consultant submitted a responsive bid and was awarded the contract for the procurement in the total amount of *[Contract price in words and figures, including currency],* hereinafter referred to as the "Contract Price."

NOW, THEREFORE, for and in consideration of the foregoing premises, the parties hereby agree as follows:

3. Unless otherwise stated, terms and expressions used in this Contract shall have the same meanings as those assigned to them in the Conditions of Contract, which form an integral part of this Contract.

4. The following documents as required by the Implementing Rules and Regulations of Republic Act No. 12009 shall form part and be read and construed as integral parts of this Contract, *viz.*:

    a. Philippine Bidding Document (PBD); *[Select one, delete the others]*

    - *For Procurement of Goods*

        i. Invitation to Bid;
        ii. Instruction to Bidders;
        iii. Bid Form, including all the documents/statements contained in the Bidder's bidding envelopes, as annexes, and all other documents submitted (e.g., Bidder's response to request for clarifications on the bid), including corrections to the bid, if any, resulting from the Procuring Entity's bid evaluation;
        iv. Bid Data Sheet;
        v. Schedule of Requirements;
        vi. Technical Specifications;
        vii. General and Special Conditions of Contract;
        viii. Supplemental Bid Bulletins, if any; and

ix. Other contract documents that may be required by existing laws and/or the Entity.

- *For Procurement of Infrastructure Projects*

i. Drawings/Plans;
ii. Specifications;/Scope of Work;
iii. Bill of Quantities;
iv. General and Special Conditions of Contract; and
v. Supplemental Bid Bulletins, if any;

- *For Procurement of Consulting Services*

i. General and Special Conditions of Contract;
ii. Terms of Reference;
iii. Request for Expression of Interest;
iv. Instructions to Bidders;
v. Bid Data Sheet;
vi. Addenda and/or Supplemental/Bid Bulletins, if any;
vii. Bid forms, including all the documents/statements contained in the Bidder's bidding envelopes, as annexes, and all other documents/ statements submitted (*e.g.*, bidder's response to request for clarifications on the bid), including corrections to the bid, if any, resulting from the Procuring Entity's bid evaluation;
viii. Eligibility requirements, documents and/or statements;
ix. Performance Security;
x. Notice of Award of Contract and the Bidder's *conforme* thereto; and
xi. Other contract documents that may be required by existing laws and/or the Entity.

b. Winning bidder's bid, including the Eligibility Requirements, Technical and Financial Proposals, and all other documents or statements submitted;

c. Performance Security;

d. Notice of Award of Contract; and the Bidder's Conforme thereto; and

e. Other contract documents that may be required by existing laws and/or the Procuring Entity concerned in the PBD, such as but not limited to the Notice to Proceed and Warranty Security.

3. In consideration of the Contract Price of *[Contract Price in words and figures],* or such other sums as may be determined in accordance with the terms of the Contract, the Supplier/Contractor/Consultant agrees to deliver and perform the items and related services for the *[Project Title]* described herein in accordance with the terms and conditions specified in the Contract and its annexed documents.

4. The *[Name of the Procuring Entity]* agrees to pay the above-mentioned sum to the Supplier/Contractor/Consultant in accordance with the schedule and manner provided in the Bidding Documents and its annexes.

5. Any dispute, difference, or claim arising out of or relating to this Contract, including its existence, validity, interpretation, breach, or termination thereof, may be submitted to arbitration or other form of alternative dispute resolution in accordance with the applicable law, such as Republic Act No. 9285 (Alternative

Dispute Resolution Act of 2004) or Executive Order No 1008, series 1985 (Construction Industry Arbitration Law).

IN WITNESS WHEREOF, the parties hereto have caused this Contract to be executed in accordance with the laws of the Republic of the Philippines on the day and year first above written.

For the Procuring Entity	*For the Bidder*
Head of the Procuring Entity or Duly Authorized Representative	Duly authorized to sign the Contract for and behalf of *[Bidders Name]*:
[Signature over Printed Name] *[Position/Designation]* *[Date]*	*[Signature over Printed Name]* *[Position/Designation]* *[Date]*

Signed in the presence of:

[Name and Signature] *Witness – Procuring Entity*	*[Name and Signature]* *Witness- Supplier*

ACKNOWLEDGMENT

BEFORE ME, A Notary Public for and in the _____, City/Province of _____, this _____ day of _____, 20_____, personally appeared the above-named persons who have satisfactorily proven to me their identity, through their identifying documents written below their names and signatures, that they are the same persons who executed and voluntarily signed the foregoing instrument consisting of ____ pages, including this page where this Acknowledgement is written, which they acknowledged before me as their free and voluntary act and deed.

WITNESS MY HAND AND SEAL this ___ day of *[month] [year].*

NAME OF NOTARY PUBLIC

Notarial Commission No. _____
Notary Public for _____ until _____
Roll of Attorneys No. _____
PTR No. __, *[date issued], [place issued]*
IBP No. __, *[date issued], [place issued]*

Doc. No. _____
Page No. _____
Book No. _____
Series of _____

Omnibus Sworn Statement Form

[Note: The duly accomplished form shall be submitted with the Bid]

REPUBLIC OF THE PHILIPPINES)
CITY/MUNICIPALITY OF _____) S.S.

OMNIBUS SWORN STATEMENT

I, *[Name of Affiant]*, of legal age, *[Civil Status]*, *[Nationality]*, and with residence at [*Address of Affiant]*, after having been duly sworn in accordance with law, do hereby depose and state that:

1. *Select one, delete the others:*

   - *If sole proprietorship:* I am the sole proprietor or authorized representative of *[Name of Bidder]* with office address at *[Address of Bidder]*;

   - *If partnership, corporation, cooperative, or joint venture:* I am the duly authorized and designated representative of *[Name of Bidder]* with office address at *[Address of Bidder]*;

   - *If individual consultant not registered under a sole proprietorship, in case of Consulting Services:* I am the individual consultant or authorized representative of *[Name of Bidder]* with office address at *[Address of Bidder]*;

2. ***Select one, delete the others:***

   - *If sole proprietorship:* As the owner and sole proprietor or authorized representative of *[Name of Bidder]*, I have full power and authority to do, execute and perform any and all acts necessary to participate, submit the bid, and to sign and execute the ensuing contract for *[Project Title]* of the *[Name of the Procuring Entity][insert* "as supported by the attached duly notarized Special Power of Attorney" *for authorized representative]*;

   - *If partnership, corporation, cooperative, or joint venture:* I am granted full power and authority to do, execute and perform any and all acts necessary to participate, submit the bid, and to sign and execute the ensuing contract for *[Project Title]* of the *[Name of the Procuring Entity]*, as supported by the attached duly notarized Special Power of Attorney, Board/Partnership Resolution, or Secretary's Certificate, whichever is applicable*;*

   - *If individual consultant not registered under a sole proprietorship, in case of Consulting Services:* As the individual consultant or authorized representative of *[Name of Bidder]*, I have full power and authority to do, execute and perform any and all acts necessary to participate, submit the bid, and to sign and execute the ensuing contract for *[Project Title]* of the *[Name of the Procuring Entity]*, as

supported by the attached duly notarized Special Power of Attorney *for authorized representative*;

3. *[Name of Bidder]* is not "blacklisted" or barred from bidding by the Government of the Philippines or any of its agencies, offices, corporations, or Local Government Units, foreign government/foreign or international financing institution whose blacklisting rules have been recognized by the Government Procurement Policy Board; by itself or by relation, membership, association, affiliation, or controlling interest with another blacklisted person or entity;

4. Each of the documents submitted in satisfaction of the bidding requirements is an authentic copy of the original, complete, and all statements and information provided therein are true and correct;

5. *[Name of Bidder]* is authorizing the Head of the Procuring Entity or its duly authorized representative(s) to verify all the documents submitted;

6. *Select one, delete the others:*

   - *If sole proprietorship :* The *[Name of Bidder]* and its spouse are not related by consanguinity or affinity up to the third civil degree to the Head of the Procuring Entity, Procurement Agent (if engaged), End-User or Implementing Unit, project consultants, head of the Project Management Office, or the members of the Bids and Awards Committee (BAC), the Technical Working Group, and the BAC Secretariat;

   - *If partnership :* The partnership itself and the partners of *[Name of Bidder]* are not related by consanguinity or affinity up to the third civil degree to the Head of the Procuring Entity, Procurement Agent (if engaged), End-User or Implementing Unit, project consultants, head of the Project Management Office, or the members of the Bids and Awards Committee (BAC), the Technical Working Group, and the BAC Secretariat;

   - *If cooperative:* The cooperative itself and members of the board of directors, general manager, or chief executive officer of *[Name of Bidder]* are not related by consanguinity or affinity up to the third civil degree to the Head of the Procuring Entity, Procurement Agent (if engaged), End-User or Implementing Unit, project consultants, head of the Project Management Office, or the members of the Bids and Awards Committee (BAC), the Technical Working Group, and the BAC Secretariat;

   - *If corporation, or joint venture:* The corporation or joint venture itself, and officers, directors, and controlling stockholders of *[Name of Bidder]* are not related by consanguinity or affinity up to the third civil degree to the Head of the Procuring Entity, Procurement Agent (if engaged), End-User or Implementing Unit, project consultants, head of the Project Management Office, or the members of the Bids and Awards Committee (BAC), the Technical Working Group, and the BAC Secretariat;

- *If individual consultant not registered under a sole proprietorship, in case of Consulting Services:* The individual consultant and its spouse are not related by consanguinity or affinity up to the third civil degree to the Head of the Procuring Entity, Procurement Agent (if engaged), End-User or Implementing Unit, project consultants, head of the Project Management Office, or the members of the Bids and Awards Committee (BAC), the Technical Working Group, and the BAC Secretariat;

7. It is understood that failure to faithfully disclose its relationship with the Head of the Procuring Entity, members of the BAC, the TWG, and the BAC Secretariat, the head of the PMO or the end-user unit or implementing unit, and the project consultants of the Procuring Entity, or of the procurement agent by consanguinity or affinity up to the third civil degree, as well as its submission of beneficial ownership information containing false entries shall be subject to blacklisting under Section 100 of the Implementing Rules and Regulations (IRR) of Republic Act (RA) No. 12009, without prejudice to criminal and civil liabilities under applicable laws, including their accessory penalties, if any.

Select one, delete the rest:

- *In case of corporations: [Name of Bidder]* declares its beneficial ownership information consistent with its updated General Information Sheet or Beneficial Ownership Declaration Form or any other document duly submitted to the SEC and has maintained a valid and updated file therein in compliance with Sections 20.2.9.1, 81, and 82 of the IRR of RA No. 12009.

- *In case of Foreign Bidders: [Name of Bidder]* submitted an appropriate equivalent document in English issued by the country of the bidder concerned in accordance with Section 20.2.9.2 of the IRR of RA No. 12009.

8. *[Name of Bidder]* complies with existing labor laws and standards; and

9. *[Name of Bidder]* is aware of and has undertaken the following responsibilities as a Bidder:

    a) Carefully examine all of the Bidding Documents;

    b) Acknowledge all conditions, local or otherwise, affecting the implementation of the Contract;

    c) Made an estimate of the facilities available and needed for the contract to be bid, if any; and

    d) Inquire or secure Supplemental Bid Bulletin(s) issued for the *[Project Title]*.

10. *[Name of Bidder]* did not give or pay directly or indirectly, any commission, amount, fee, or any form of consideration, pecuniary or

otherwise, to any person or official, personnel or representative of the government in relation to any procurement project or activity.

11. In case advance payment was made or given to *[Name of Bidder]*, failure to perform or deliver any of the obligations and undertakings in the contract shall be sufficient grounds to constitute criminal liability under existing laws.

IN WITNESS WHEREOF, I have hereunto set my hand this __ day of ___, 20__ at _____, Philippines.

Duly authorized to sign the Bid for and behalf of:

[Insert Bidder's Name]

[Affiant's Signature over Printed Name]
[Position/Designation]
[Date]

JURAT

SUBSCRIBED AND SWORN to before me this _____ day of *[month] [year]* at *[place of execution]*, Philippines. Affiant/s is/are personally known to me and was/were identified by me through competent evidence of identity as defined in the 2004 Rules on Notarial Practice (A.M. No. 02-8-13-SC). Affiant/s exhibited to me his/her *[insert type of government identification card used]*, with his/her photograph and signature appearing thereon, with no. _____.

WITNESS MY HAND AND SEAL this ___ day of *[month] [year].*

NAME OF NOTARY PUBLIC
Notarial Commission No. _____
Notary Public for _____ until _____
Roll of Attorneys No. _____
PTR No. __, *[date issued], [place issued]*
IBP No. __, *[date issued], [place issued]*

Doc. No. _____
Page No. _____
Book No. _____
Series of _____.

Bid Securing Declaration Form

[The duly accomplished form shall be submitted with the Bid if bidder opts to provide this type of bid security]

REPUBLIC OF THE PHILIPPINES)
CITY/MUNICIPALITY OF _____) S.S.

BID SECURING DECLARATION

Project Identification No.: *[Number]*

To: *[Insert name of the Procuring Entity]*

I/We, the undersigned, declare that:

1) I/We understand that, according to your conditions, bids must be supported by a Bid Security, which may be in the form of a Bid Securing Declaration;

   [Insert paragraph for Unsolicited Offer with Bid Matching]

   I/We understand that upon conferment of the original offeror status under Section 30.6 of the Implementing Rules and Regulations (IRR) of Republic Act (RA) No. 12009, the offeror shall submit a Bid Securing Declaration within ten (10) days from the receipt of the certificate of conferment;

2) Select one, delete the other:

   - I/We accept that: (a) I/we will be automatically disqualified from bidding for any procurement contract with any Procuring Entity upon receipt of your Blacklisting Order; and, (b) I/we will pay the applicable fine provided under the Guidelines on the Use of Bid Securing Declaration, within fifteen (15) days from receipt of the written demand by the Procuring Entity for the commission of acts resulting to the enforcement of the Bid Securing Declaration under Sections 52.2 (a), 63.2, 69.1 and 100, except 100.3 (c),of the IRR of Republic Act No. 12009; without prejudice to other legal action the government may undertake; and

   (For Unsolicited Offer with Bid Matching)

   - I/We accept that: I/we will be automatically disqualified from any procurement opportunity of the Procuring Entity for a period of one (1) year on the first offense, two (2) years on the second offense, and perpetually on the third offense without prejudice to other legal action the government may undertake.

3) I/We understand that this Bid Securing Declaration shall cease to be valid on the following circumstances:

   a) Upon expiration of the bid validity period, or any extension thereof pursuant to your request;

b) I am/we are declared ineligible or post-disqualified upon receipt of your notice to such effect, and (i) I/we failed to timely file a request for reconsideration or (ii) I/we filed a waiver to avail of said right;

[Insert this paragraph for Unsolicited Offer with Bid Matching]

b) Upon contract award and the LCCRB is not the original offeror; or

c) I am/we are declared the bidder with the *[Insert Award Criterion[1]]* and I/we have furnished the performance security and signed the Contract.

IN WITNESS WHEREOF, I/We have hereunto set my/our hand/s this ____ day of *[month] [year]* at *[place of execution]*.

Duly authorized to sign the Bid for and behalf of:

[Insert Bidder's Name]

[Signature over Printed Name]
[Position/Designation]
[Date]

JURAT

SUBSCRIBED AND SWORN to before me this _____ day of *[month] [year]* at *[place of execution]*, Philippines. Affiant/s is/are personally known to me and was/were identified by me through competent evidence of identity as defined in the 2004 Rules on Notarial Practice (A.M. No. 02-8-13-SC). Affiant/s exhibited to me his/her *[insert type of government identification card used]*, with his/her photograph and signature appearing thereon, with no. _____.

WITNESS MY HAND AND SEAL this ___ day of *[month] [year].*

NAME OF NOTARY PUBLIC
Notarial Commission No. _____
Notary Public for _____ until _____
Roll of Attorneys No. _____
PTR No. __, *[date issued], [place issued]*
IBP No. __, *[date issued], [place issued]*

Doc. No. _____
Page No. _____
Book No. _____
Series of _____.

STATEMENT OF ONGOING GOVERNMENT AND PRIVATE CONTRACTS INCLUDING CONTRACT AWARDED BUT NOT YET STARTED

The Bids and Awards Committee
Department of Energy
Energy Center, Rizal Drive, Bonifacio Global City
Taguig, Metro Manila

Ongoing or awarded but not yet started projects for the period _____ (last (2) years), where applicable.

Procuring Entity / Date of Contract	Kinds of Goods Sold and/or Services Offered	Amount of Contract and Value of Outstanding Contracts	Date of Delivery	Specify whether a Prospective Bidder is a Manufacturer, Supplier, Distributor or Service Provider	Indicate whether "Similar" or "Not Similar"

Submitted By:

_____

(Signature over Printed Name)

Note:
1. May be reproduced, if necessary
2. Please attach Purchase Order, Notice of Award or other similar document

STATEMENT OF SINGLE LARGEST COMPLETED CONTRACT

The Bids and Awards Committee
Department of Energy
Energy Center, Rizal Drive, Bonifacio Global City
Taguig, Metro Manila

Single Largest Completed Contract (SLCC) for the period _____
(last two (2) years), where applicable.

Procuring Entity / Date of Contract	Kinds of Goods Sold and/or Services Offered	Amount of Contract and Value of Outstanding Contracts	Date of Delivery	Specify whether a Prospective Bidder is a Manufacturer, Supplier, Distributor or Service Provider	Indicate whether "Similar" or "Not Similar"

Submitted By:

_____
(Signature over Printed Name)

Note:
1. May be reproduced, if necessary
2. Please attach certificate of acceptance or other similar contracts

Checklist of Technical and Financial Documents
(Goods and Services)

I. TECHNICAL COMPONENT ENVELOPE *(one (1) original copy and two copies)*

Class "A" Documents

Legal Documents

☐	(a)	Valid PhilGEPS Registration Certificate (Platinum Membership) (all pages) **in accordance with Section 20 of the IRR of RA12009**;

Technical Documents

☐	(b)	Statement of the prospective bidder of all its ongoing government and private contracts, including contracts awarded but not yet started, if any, whether similar or not similar in nature and complexity to the contract to be bid **(Bidding Form Annex A)**; **and**
☐	(f)	Statement of the bidder's Single Largest Completed Contract (SLCC) **(Bidding Form Annex B)** similar to the contract to be bid, except under conditions provided for in Sections 52.4.1.3 and 52.4.2.4 of RA No. 12009 and its IRR, within the relevant period as provided in the Bidding Documents; **and**
☐	(g)	Bid Security in the prescribed form and amount. The bidder shall submit a Bid Securing Declaration, or any form of bid security in an amount not less than the required percentage of the ABC as provided under Section 56.2 of the IRR of RA 12009; and
☐	(h)	Conformity with the Technical Specifications, which may include production/delivery schedule, manpower requirements, and/or after-sales/parts, as stated in Section VII. Technical Specification; **and**
☐	(i)	Original duly signed Omnibus Sworn Statement (OSS) **(Bidding Form Annex D) and** if applicable, Original Notarized Secretary's Certificate in case of a corporation, partnership, or cooperative; or Original Special Power of Attorney of all members of the joint venture giving full power and authority to its officer to sign the OSS and do acts to represent the Bidder

Financial Documents

☐	(j)	The Supplier's audited financial statements, showing, among others, the Supplier's total and current assets and liabilities, electronically submitted and "acknowledged received" and/ or stamped "received" by the BIR or its duly accredited and authorized institutions, for the preceding calendar year which should not be earlier than two (2) years from the date of bid submission; and
☐	(k)	The prospective bidder's computation of Net Financial Contracting Capacity (NFCC) **or A** committed Line of Credit from a Universal or Commercial Bank in lieu of its NFCC computation.

Class "B" Documents

If applicable, a valid joint venture agreement (JVA), in case the joint venture is already in existence. In the absence of a JVA, duly notarized statements from all the potential joint venture partners should be included in the bid, stating that they will enter into and abide by the provisions of the JVA in the event that the bid is successful. Failure to enter into a joint venture in the event of a contract award shall be a ground for the forfeiture of the bid security.

Each partner of the joint venture shall submit their respective PhilGEPS Certificates of Registration in accordance with Section 20.2.9.1 of this IRR. The submission of technical and financial eligibility documents by any of the joint venture partners constitutes compliance; Provided, That the partner responsible to submit the NFCC shall likewise submit the Statement of all of its ongoing contracts.

II. FINANCIAL COMPONENT ENVELOPE ***(one (1) original copy and two copies)***

☐	(l)	Original of duly signed and accomplished Financial Bid Form **(Bidding Form Annex E)**; **and**
☐	(m)	Original of duly signed and accomplished Price Schedule(s) **(Bidding Form Annex F)**.

Other documentary requirements under RA No.12009 (as applicable)

☐	(n)	*[For foreign bidders claiming by reason of their country's extension of reciprocal rights to Filipinos]* Certification from the relevant government office of their country stating that Filipinos are allowed to participate in government procurement activities for the same item or product.
☐	(o)	Certification from the DTI if the Bidder claims preference as a Domestic Bidder or Domestic Entity.

III. Post-Qualification Requirements:

☐	1. In case only the PhilGEPS Registration Certificate (Platinum Membership) was submitted during the bid opening, submit the certified true copies of the following: (a) Registration certificate from Securities and Exchange Commission (SEC), Department of Trade and Industry (DTI) for sole proprietorship, or Cooperative Development Authority (CDA) for cooperatives or its equivalent document; (b) Mayor's or Business permit issued by the city or municipality where the principal place of business of the prospective bidder is located, or the equivalent document for Exclusive Economic Zones or Areas; and (c) Tax clearance per E.O. No. 398, s. 2005, as finally reviewed and approved by the Bureau of Internal Revenue (BIR).
☐	2. Latest Income/Business Tax Returns;
☐	3. Certificate of PhilGEPS Registration;
☐	4. Pictures of its principal place of business;

☐	5. In case of Goods, submit brochures/prototype/actual sample of the products being offered or in case of Services, concept paper/write-up or description of the services being offered; which must be submitted on the date indicated in the post-qualification letter, addressed to the TWG Head, and certifies that it is the bidder's official and final offer. Non-submission of this requirement may be a ground for disqualification.
☐	6. In case of procurement for manpower services, proof of contribution/remittance for SSS, Philhealth and Pag-ibig for the last six (6) months from the opening of bid; and
☐	7. Other appropriate licenses and permits required by law as stated in the bidding documents/post-qualification letter.


Republic of the Philippines
gppb
Government Procurement Policy Board