DEPARTMENT OF ENERGY
(Kagawaran ng Enerhiya)
Procurement Management Division
G/F DOE Main Bldg., Energy Center, Rizal Drive cor. 34th Street
Bonifacio Global City, Taguig City, Philippines 1632
Telephone No.: (02) 3479-2900 local 428
Facsimile: (02) 8541-4105
Email address: **bacsecretariat@doe.gov.ph**

BIDDING DOCUMENTS

Supply, Delivery, Installation, Testing and Commissioning of Mobile Energy System (MES)

(Purchase Request No. 05-0151-2026-09-0577/05-0151-2026-0578)

First Edition
May 2025

TABLE OF CONTENTS

Glossary of Acronyms, Terms, and Abbreviations 4

Definition of Terms 6

Section I. Invitation to Bid 8

Section II. Instructions to Bidders 14

Section III. Bid Data Sheet 46

Section IV. General Conditions of Contract 52

Section V. Special Conditions of Contract 68

Section VI. Schedule of Requirements 74

Section VII. Technical Specifications 75

Section VIII. Philippine Bidding Document Related Forms 133

Glossary of Acronyms, Terms, and Abbreviations

ABC – Approved Budget for the Contract.

BAC – Bids and Awards Committee.

BDS – Bid Data Sheet.

BIR – Bureau of Internal Revenue.

BSP – Bangko Sentral ng Pilipinas.

CDA - Cooperative Development Authority.

CIF – Cost Insurance and Freight.

CIP – Carriage and Insurance Paid.

COS – Contract of Service.

CPI – Consumer Price Index.

DDP – Delivered Duty Paid.

DOLE – Department of Labor and Employment.

DTI – Department of Trade and Industry.

EXW – Ex works.

FCA – "Free Carrier" shipping point.

FOB – "Free on Board" shipping point.

GCC - General Conditions of Contract.

GFI – Government Financial Institution.

GOCC – Government-Owned and/or –Controlled Corporation.

GoP – Government of the Philippines.

GPPB – Government Procurement Policy Board.

HoPE – Head of Procuring Entity.

INCOTERMS – International Commercial Terms.

IRR – Implementing Rules and Regulations.

ITB – Instructions to Bidders.

JO – Job Order.

LCB- Lowest Calculated Bid.

LCRB – Lowest Calculated Responsive Bid.

LGU – Local Government Unit

LoC – Letter of Credit.

MAB – Most Advantageous Bid.

MARB – Most Advantageous Responsive Bid.

MEARB – Most Economically Advantageous Responsive Bid.

MYCA – Multi-Year Contracting Authority.

NFCC – Net Financial Contracting Capacity.

NGA – National Government Agency.

PhilGEPS - Philippine Government Electronic Procurement System.

PSA – Philippine Statistics Authority.

RA No. – Republic Act Number.

SARB – Single Advantageous Responsive Bid.

SCC - Special Conditions of Contract.

SCRB – Single Calculated Responsive Bid.

SEARB – Single Economically Advantageous Responsive Bid.

SEC – Securities and Exchange Commission.

SLCC – Single Largest Completed Contract.

UN – United Nations.

Definition of Terms

Bid – a signed offer, proposal, or quotation submitted by a supplier, manufacturer, distributor, contractor, consultant, or service provider in response to the requirements of the Procuring Entity as stated in the Bidding Documents. (IRR, Section 5[c]).

Bidder – a supplier, manufacturer, distributor, contractor, consultant, and service provider, whether public or private, who submits a Bid in response to the requirements of the Procuring Entity as stated in the Bidding Documents. (IRR, Section 5[d]).

Bidding Documents – the documents issued by the Procuring Entity as the basis for Bids, furnishing all information necessary to prospective Bidder to prepare a Bid for the Goods, Infrastructure Projects, and Consulting Services required by the Procuring Entity. (IRR, Section 5[e]).

Contract – refers to the agreement entered into between the Procuring Entity and the Supplier or Manufacturer or Distributor or Service Provider for procurement of Goods and Services; Contractor for Procurement of Infrastructure Projects; or Consultant or Consulting Firm for Procurement of Consulting Services; as the case may be, as recorded in the Contract Form signed by the parties, including all attachments and appendices thereto and all documents incorporated by reference therein.

Contract Price - the price payable to the Supplier under the Contract for the full and proper performance of its contractual obligations.

Effective Date of the Contract – the date indicated in the contract. However, the Supplier shall commence performance of its obligations only upon receipt of the Notice to Proceed.

Foreign-funded Procurement or Foreign-Assisted Project – refers to the acquisition of Goods, Consulting Services, and the contracting for Infrastructure Projects by the Government of the Philippines which are wholly or partly funded by foreign loans or grants pursuant to a Treaty or International or Executive Agreement.

Framework Agreement – is a procurement strategy which shall be in the nature of an option contract between the Procuring Entity and the Bidder that stipulates the terms and conditions to be applied in subsequent contracts for the procurement of Goods, Infrastructure Projects, and Consulting Services with a single or multiple contractor, manufacturer, supplier, distributor, consultant, and service provider to expand the pool of prospective Bidders, take advantage of economies of scale, minimize the administrative burden of conducting separate procurement activities, and generate time and money savings. (IRR, Section 16.2).

Goods – refer to (i) all items, supplies, and materials, whether in the nature of equipment, furniture, stationery, materials for construction, or personal property of any kind, needed in the transaction of public businesses or in the pursuit of any government undertaking, project or activity; or (ii) general support services which pertain to all types of services except Consulting Services and Infrastructure Projects, such as the repair and maintenance of equipment and furniture, as well as trucking, hauling, janitorial, security, and related or analogous services. Personnel Services or individual COS or JO engagements do not fall under this definition; (IRR, Section 5[n])

MARB – refers to the award criteria in the procurement of Goods where the considerations for the award of contract are the eligibility of the bidder, the responsiveness of its bid to the

technical requirements, and the most advantageous bid in reference to the highest rated offer based on the quality component of the bid.

MEARB – refers to the award criteria in the procurement of Goods where the considerations for the award of contract are the eligibility of the bidder, and the responsiveness of its bid to the technical requirements, and the determination of the most economically advantageous bid in reference to the quality-price ratio allocated to the technical and financial components of the bid.

Online submission – pertains to the submission of the bid for Goods and the bid envelopes containing the technical and financial components of the bid through electronic means or through the electronic bidding facility of the PhilGEPS.

Project – refers to a specific or identified procurement covering Goods, Infrastructure Projects or Consulting Services. A Procurement Project shall be described, detailed, and scheduled in the Project Procurement Management Plan prepared by the agency which shall be consolidated in the procuring entity's Annual Procurement Plan.

Services - means those services ancillary to the supply of the Goods, such as transportation and insurance, and any other incidental services, such as installation, commissioning, provision of technical assistance, training, and other such obligations of the Supplier covered under the Contract.

Supplier – refers to a citizen, or any corporate body or commercial company duly organized and registered under the laws where it is established, habitually established in business and engaged in the manufacture or sale of the merchandise or performance of the general services covered by its Bid. Supplier as used in these Bidding Documents may likewise refer to a manufacturer, distributor, contractor, or consultant, or service provider.

Verified Report - the report submitted by the Implementing Unit to the HoPE setting forth its findings as to the existence of grounds or causes for termination and explicitly stating its recommendation for the issuance of a Notice to Terminate.

Section I. Invitation to Bid

DEPARTMENT OF ENERGY
Energy Center, Rizal Drive cor. 34th Street
Bonifacio Global City, Taguig City, Philippines 1632
Telephone No.: (02) 3479-2900 local 428
Facsimile: (02) 8541-4105
Email address: **bacsecretariat@doe.gov.ph**

INVITATION TO BID FOR THE SUPPLY, DELIVERY, INSTALLATION, TESTING AND COMMISSIONING OF MOBILE ENERGY SYSTEM (MES)

1) The **Department of Energy (DOE)**, through the **General Appropriations Act CY2026** intends to apply the sum of **Php513,500,000.00** being the Approved Budget for the Contract (ABC) to payments under the contract for the **Supply, Delivery, Installation, Testing and Commissioning of Mobile Energy System (MES)** with **PR No. 05-0151-2026-09-0577/05-0151-2026-0578.** Bids received in excess of the ABC shall be automatically rejected at bid opening.

Lot No.	Description	Unit Cost	No. of MES	Total Cost (Php)
1	MES integrated in vehicle	10,000,000	8	80,000,000.00
2	MES (towable) for disaster response	8,300,000	14	116,200,000.00
3	MES (towable) for electrification, including Specialized Outlet (DLE-compatible)	9,200,000	19	174,800,000.00
4	MES (towable) with hybrid controller with NPC SPUG Existing Generator	9,500,000	15	142,500,000.00
Total			**56**	**513,500,000.00**

2) The **DOE** now invites bids for the **Supply, Delivery, Installation, Testing and Commissioning of Mobile Energy System (MES)** with **PR No. 05-0151-2026-09-0577/05-0151-2026-0578.** Delivery of the Goods/Services is **One Hundred Twenty (120) calendar days upon receipt of Notice to Proceed (NTP).** Bidders should have completed at least **five (5) years** from the date of submission and receipt of bids, contracts similar to the Project. The description of an eligible bidder is contained in the Bidding Documents, particularly, in Section II. Instructions to Bidders.

3) Bidding will be conducted through competitive bidding procedures using a non-discretionary "pass/fail" criterion as specified in the Implementing Rules and Regulations of Republic Act No. 12009. [1]

i) Bidding is open to all interested Bidders, whether local or foreign, subject to the conditions for eligibility provided in the IRR.

4) Interested Bidders may obtain further information from:

The DOE is implementing an **Alternative Work Arrangement setting with working days at DOE from Mondays to Thursdays, and Flexible Work Arrangements on Fridays.** Interested bidders may obtain further information from the Department of Energy – Procurement Management Division and inspect the Bidding Documents at the address given below during office hours from Mondays to Thursdays from 8:00am to 4:00pm.

Procurement Management Division
Department of Energy
G/F-Annex Building, Energy Center
Rizal Drive cor. 34th Street, Bonifacio Global City
Taguig City, Philippines 1632

Please secure the Order of Payment by sending an email to **pmd@doe.gov.ph** or **pmarqueta@doe.gov.ph** with the following information before payment:

1. Procurement Title or Title of Item to be Bidded: _____
2. Company Name: _____
3. Company Address: _____
4. Email Address: _____
5. Contact No.: _____

The Order of Payment will be issued through the email address provided by the Bidder.

The DOE also accepts payment for the Bidding Documents through bank payment (Landbank of the Philippines):

Payment for	:	Bidding Documents for [Item to be Bidded]
Payee Account Name	:	DOE Trust Fund
Account Number	:	3982-1098-59
Swift Code	:	TLBPPHMM
Beneficiary Address	:	Department of Energy, Energy Center, BGC Taguig City

[1] Sec. 52.4.1.2 Foreign Bidders may be eligible to participate under any of the following circumstances in accordance with the guidelines issued by the GPPB:

a. When provided for under any treaty or international or executive agreement as provided in Section 4 of the Act and this IRR;
b. When the foreign supplier is a citizen, corporation, or association of a country, the laws, or regulations of which grant reciprocal rights or privileges to citizens, corporations, or associations of the Philippines;
c. When the goods sought to be procured are not available from local suppliers; or
d. When there is a need to prevent situations that defeat competition or restrain trade.

Copy of the payment receipt must be emailed to:

Jaymee Joy A. Deogracias:
bacsecretariat@doe.gov.ph or **jdeogracias@doe.gov.ph**

For Pre-Bid Conference purposes, the Bidding Documents may be downloaded free of charge from the website of the Philippine Government Electronic Procurement System (PhilGEPS) and the website of the Procuring Entity. The bidder shall pay the Bidding Documents not later than the submission of their bids.

Bidders are encouraged to download a copy of the Bidding Documents for Pre-Bid Conference purposes instead of physically securing a hard copy at the DOE-BAC Secretariat office.

5) A complete set of Bidding Documents may be acquired by interested Bidders on **25 September 2026** upon payment of the applicable fee for the Bidding Documents, pursuant to the latest Guidelines issued by the GPPB**,** based on the schedule below:

Lot No.	Description	ABC (Php)	Bid Document Fee
1	MES integrated in vehicle	80,000,000.00	Php10,000.00
2	MES (towable) for disaster response	116,200,000.00	Php15,000.00
3	MES (towable) for electrification, including Specialized Outlet (DLE-compatible)	174,800,000.00	Php25,000.00
4	MES (towable) with hybrid controller with NPC SPUG Existing Generator	142,500,000.00	Php25,000.00

It may also be downloaded free of charge from the website of the Philippine Government Electronic Procurement System (PhilGEPS) and the website of the Procuring Entity, provided that Bidders shall pay the applicable fee for the Bidding Documents not later than the submission of their bids.

6) The **DOE** will hold a Pre-Bid Conference on **8:00AM on 02 October 2026** at the **DOE-Databank Training Room** which shall be open to prospective Bidders. You may refer to the link provided to confirm your participation and attendance.



https://forms.office.com/r/ZUBry2BKSJ?origin=lprLink

7) Bids must be duly received by the BAC Secretariat through manual submission at the office address indicated below on or before **8:00AM of 16 October 2026** or submission could be made through courier service provided it will be stamped-received by the DOE Records Management Division or the BAC Secretariat on or before **8:00AM of 16 October 2026**. Online submission is not yet available. Late bids shall not be accepted.

   Procurement Management Division
   Department of Energy
   G/F-Annex Building, Energy Center
   Rizal Drive cor. 34th Street, Bonifacio Global City
   Taguig City, Philippines 1632

8) All Bids must be accompanied by a Bid Security in any of the acceptable forms and in the amount stated in ITB Clause 16.1.

9) Bid opening shall be on **9:00AM of 16 October 2026** at **DOE-EUMB Conference Room.** The Bidder's official and/or authorized representative, as stated in the bid submission, is required to attend the Bid Opening. Bids will be opened in the presence of the bidders' representative. Attendees shall be subject to the DOE Protocols for Visitors.

10) If the Bidder has constraints, it has the option to attend the Opening of Bids through Video conferencing using MS Teams. Prospective bidders are advised to download MS Teams app prior to the date of the Opening of Bids. The bidders are required to submit the following information through bacsecretariat@doe.gov.ph or jdeogracias@doe.gov.ph on or before **12 October 2026:**

    a) Complete name of the authorized company representative who will participate in the Pre-Bid Conference. Complete company Name, address and contact details;

    b) Active email addresses where the invitation/link will be sent; and

    c) Indicate the item/s the company would like to participate.

11) The **DOE** reserves the right to reject any and all bids, declare a failure of bidding, or not award the contract at any time prior to contract award in accordance with Section 70[2] of R.A. No. 12009, without incurring any liability to the affected Bidder or Bidders.

2 Reservation Clause

12) For further information, please refer to:

Jaymee Joy A. Deogracias
Procurement Management Division
G/F-Annex Building., Energy Center
Rizal Drive cor. 34th Street, Bonifacio Global City
Taguig City, Philippines 1632
Email address: **bacsecretariat@doe.gov.ph**
Telephone/Facsimile: (02) 3479-2900 local 383 (02) 8541-4105
Website: **www.doe.gov.ph**

13) You may visit the following websites:

For downloading of Bidding Documents: *www.doe.gov.ph*

For electronic bid submission: *Not yet Available*

24 September 2026

Undersecretary RONALD V. CONQUILLA
Chairperson
Bids and Awards Committee

Section II. Instructions to Bidders

TABLE OF CONTENTS

A. General 18

1) Scope of Bid 18

2) Source of Funds 18

3) Corrupt, Fraudulent, Collusive, and Coercive Practices 18

4) Conflict of Interest 19

5) Eligible Bidders 21

6) Bidder's Responsibilities 23

7) Origin of Goods 25

8) Subcontracts 25

B. Contents of Bidding Documents 26

9) Pre-Bid Conference 26

10) Clarification and Amendment of Bidding Documents 26

C. Preparation of Bids 27

11) Language of Bids 27

12) Documents Comprising the Bid: Technical and Financial Components 27

13) Bid Prices 29

14) Bid Currencies 30

15) Bid Validity 30
16) Bid Security 31
17) Format and Signing of Bids 33
18) Sealing and Marking of Bids 33
D. Submission and Opening of Bids 34
19) Deadline for Submission of Bids 34
20) Late Bids 34
21) Modification and Withdrawal of Bids 34
22) Opening and Preliminary Examination of Bids 35
E. Evaluation and Comparison of Bids 36
23) Process to be Confidential 36
24) Clarification of Bids 36
25) Domestic Preference 36
26) Detailed Evaluation and Comparison of Bids 38
27) Post-Qualification 40
28) Reservation Clause 41
F. Award of Contract 42
29) Contract Award 42

30) Signing of the Contract 43
31) Performance Security 43
32) Notice to Proceed 45
33) Protest Mechanism 45

A. General

1) Scope of Bid

1.1 The Procuring Entity, named in the **BDS** invites bids for the Project with Identification Number which shall be specified in the **BDS.**

1.2 The Project is composed of number of lots or items as provided in the **BDS**, the details of which are described in Section VII. Technical Specifications.

2) Source of Funds

The Procuring Entity has a budget or has received funds from the Funding Source named in the **BDS**, and in the amount indicated in the **BDS**. It intends to apply part of the funds received for this Project to cover eligible payments under the contract.

3) Corrupt, Fraudulent, Collusive, and Coercive Practices

3.1 Unless otherwise specified in the **BDS**, the Procuring Entity, as well as the Bidders and Suppliers, shall observe the highest standard of ethics during the procurement and execution of the contract. In pursuance of this policy, the Procuring Entity:

a) defines, for purposes of this provision, the following terms under existing laws, rules, and regulations:

i) "corrupt practice" means an act by which officials in the public or private sectors improperly and unlawfully enrich themselves, others, or induce others to do so, by misusing the position in which they are placed, and includes the offering, giving, receiving, or soliciting of anything of value to influence the action of any such official in the procurement process or in contract execution; entering, on behalf of the government, into any contract or transaction manifestly and grossly disadvantageous to the same, whether or not the public officer profited or will profit thereby, and similar acts as provided in RA No. 3019.

ii) "fraudulent practice" means a misrepresentation of facts for purposes of influencing a procurement process or the execution of a contract to the detriment of the Procuring Entity, which includes collusive practices among Bidders (prior to or after bid submission) designed to establish bid prices at artificial, non-competitive levels and to deprive the Procuring Entity of the benefits of free and open competition.

iii) "collusive practices" means a scheme or arrangement between two or more Bidders, with or without the knowledge of the Procuring Entity, designed to establish bid prices at artificial, non-competitive levels.

iv) “coercive practices” means harming or threatening to harm, directly or indirectly, persons, or their property to influence their participation in a procurement process, or affect the execution of a contract;

v) “obstructive practice” is

a) deliberately destroying, falsifying, altering or concealing of evidence material to administrative proceedings or investigation or making false statements to investigators in order to materially impede administrative proceedings or investigation of the Procuring Entity or any foreign government/foreign or international financing institution relative to allegations of a corrupt, fraudulent, coercive, or collusive practice; and/or threatening, harassing, or intimidating any party to prevent the latter from disclosing its knowledge of matters relevant to the administrative proceedings or investigation or from pursuing such proceedings or investigation; or

b) acts intended to materially impede the exercise of the inspection and audit rights of the Procuring Entity or any foreign government/foreign or international financing institution herein.

b) Undertakes to reject a proposal for award upon *prima facie* determination that the Bidder recommended for award has engaged in any of the prohibited practices mentioned in this Clause for purposes of competing for the contract.

3.2 Further, the Procuring Entity will seek to impose the maximum civil, administrative, and/or criminal penalties available under applicable laws on individuals and organizations deemed to be involved in any of the practices mentioned in ITB Clause 3.1(a).

3.3 Furthermore, the Funding Source and the Procuring Entity reserve the right to inspect and audit records and accounts of a Bidder or Supplier in the bidding for and performance of a contract themselves or through independent auditors as reflected in the **GCC** Clause 3.

4) Conflict of Interest

4.1 All Bidders found to have conflicting interests shall be disqualified to participate in the procurement at hand, without prejudice to the imposition of appropriate administrative, civil, and criminal sanctions. A Bidder may be considered to have conflicting interests with another Bidder in any of the events described in paragraphs (a) through (c) below and a general conflict of interest in any of the circumstances set out in paragraphs (d) and (f) below:

a) A Bidder has controlling shareholders or beneficial owners in common with another Bidder;

b) A Bidder receives or has received any direct or indirect subsidy from any other Bidder;

c) A Bidder has the same legally authorized representative as that of another Bidder for purposes of this bid;

d) A Bidder has a relationship, directly or through third parties, that puts them in a position to have access to information about or influence on the bid of another Bidder or influence the decisions of the Procuring Entity regarding this bidding process; This may include a firm or an organization that lends, or temporarily seconds, its personnel to firms or organizations that are engaged in consulting services for the preparation related to procurement for or implementation of the project, if the personnel would be involved in any capacity on the same project;

e) A Bidder who participated as a consultant in the preparation of the design or technical specifications of the Goods and related services that are the subject of the bid.

f) A Bidder who lends, or temporarily seconds, its personnel to firms or organizations which are engaged in consulting services for the preparation related to procurement for or implementation of the project, if the personnel would be involved in any capacity on the same project.

4.2 All Bidding Documents shall be accompanied by an omnibus sworn statement of the Bidder that it is not related, by consanguinity or affinity up to the third level, to the HoPE, Procurement Agent (if engaged), the head of the Project Management Office (PMO), the End-User or Implementing Unit or any members of the Bids and Awards Committee (BAC), Technical Working Group (TWG), and BAC Secretariat.

4.3 The Bidder shall also disclose the ultimate beneficial ownership of an entity. Failure to comply shall be a ground for the automatic disqualification of the bid in consonance with Section 59 of the IRR. For this reason, relation to the aforementioned persons within the third civil degree of consanguinity or affinity shall automatically disqualify the Bidder from participating in the procurement of contracts of the Procuring Entity notwithstanding the act of such persons inhibiting themselves from the procurement process. This Clause shall apply to the following persons and affiliates:

a) In the case of individuals or sole proprietorships, to the Bidders and their spouses;

b) In the case of partnerships, to the partnership itself and its partners;

c) In the case of cooperatives, to the cooperative itself and members of the board of directors, general manager or chief executive officer;

d) A partnership, joint venture or consortium which is blacklisted or which has blacklisted member/s or partner/s, as well as a person

or entity who is a member of a blacklisted joint venture or consortium, are, likewise not allowed to participate in any government procurement during the period of suspension or blacklisting; and

e) In the case of corporations, a single stockholder, together with their relatives up to the third civil degree of consanguinity or affinity, and their assignees, holding at least twenty percent (20%) of the shares therein, its chairperson and president, shall be blacklisted after they have been determined to hold the same controlling interest in a previously blacklisted corporation or in two corporations that have been blacklisted; the corporations of which they are part of shall also be blacklisted.

5) Eligible Bidders

5.1 Only Bids found to be legally, technically, and financially eligible will be evaluated. For procurement of Goods, the following persons shall be eligible to participate in this bidding:

a) Duly-licensed Filipino citizens or sole proprietorships;

b) Partnerships duly organized under the laws of the Philippines and of which at least sixty percent (60%) of the interest belongs to citizens of the Philippines;

c) Corporations duly organized under the laws of the Philippines, and of which at least sixty percent (60%) of the outstanding capital stock belongs to citizens of the Philippines;

d) Cooperatives duly organized under the laws of the Philippines; and

e) Persons or entities forming themselves into a Joint Venture (JV), i.e., a group of two (2) or more persons or entities that intend to be jointly and severally responsible or liable for a particular contract: Provided, however, that Filipino ownership or interest of the JV concerned shall be at least sixty percent (60%). For this purpose, Filipino ownership or interest shall be based on the contributions of each of the members of the joint venture as specified in their Joint Venture Agreement (JVA); Provided, further, that the primary purpose of each member of the JV must be similar to or related with the requirements of the project to be bid out.

5.2 Foreign Bidders may be eligible to participate when any of the following circumstances exist, as specified in the **BDS**:

a) When provided for under any treaty or international or executive agreement as provided in Section 4 of the IRR;

b) When the foreign supplier is a citizen, corporation, or association of a country, the laws or regulations of which grant reciprocal rights or privileges to citizens, corporations, or associations of the Philippines;

c) When the Goods sought to be procured are not available from local suppliers; or

d) When there is a need to prevent situations that defeat competition or restrain trade.

5.3 GOCCs may be eligible to participate only if they can establish that they (a) are legally and financially autonomous, (b) operate under commercial law, and (c) are not attached agencies of the Procuring Entity.

5.4 The Bidder must have completed, within a period of ten (10) years from the submission of the bid, unless a shorter period is indicated in the Invitation to Bid and **BDS**, a Single Largest Completed Contract (SLCC) that is similar to the procurement project to be bid, and whose value must be equivalent to at least fifty percent (50%) of the ABC, adjusted to current prices using the Philippine Statistics Authority (PSA) consumer price indices.

5.5 If the Procuring Entity determines that it is necessary to adopt a different SLCC requirement to ensure broader Bidder participation while establishing their technical capacity, it may allow Bidders to present a combination of contracts completed within the same period, provided their total value is at least fifty percent (50%) of the ABC, thus:

a) The Bidder should have completed at least one (1) similar contract amounting to at least 25% of the ABC; and

b) The Bidder should have completed other contracts, whether similar or not, with an aggregate amount of at least 25% of the ABC.

For this purpose, the Procuring Entity may clarify in the **BDS** the definition or description of what it considers to be a similar project, which must be germane to the kind, class, or genus of goods or services to be procured, guided by the principle of proportionality and fit-for-purpose approach.

5.6 The Bidder must submit a computation of its Net Financial Contracting Capacity (NFCC), which must be at least equal to the ABC to be bid, calculated as follows:

NFCC = [(Current assets minus current liabilities) (15)] minus the value of all outstanding or uncompleted portions of the projects under ongoing contracts, including awarded contracts yet to be started coinciding with the contract to be bid.

The values of the domestic Bidder's current assets and current liabilities shall be based on the latest Audited Financial Statements (AFS) submitted to the BIR not earlier than two (2) years prior to date of bid submission.

For purposes of computing the foreign Bidders' NFCC, the value of the current assets and current liabilities shall be based on their latest AFS

prepared in accordance with International Financial Reporting Standards.

If the Bidder opts to submit a committed Line of Credit, it must be at least equal to ten percent (10%) of the ABC to be bid. Provided that, if issued by a foreign bank, it shall be confirmed or authenticated by a local bank.

6) Bidder's Responsibilities

6.1 The Bidder or its duly authorized representative shall submit an omnibus sworn statement, in the form prescribed in Section VIII. Philippine Bidding Document Related Forms, as required in ITB Clause 12.1(viii).

6.2 Before submitting their bids, the Bidder is deemed to be knowledgeable with all existing laws, decrees, ordinances, acts and regulations of the Philippines which may affect this Project in any way.

6.3 The Bidder undertook the following responsibilities:

a) Took steps to carefully examine and ensure full understanding and comprehension of the Bidding Documents, its requirements, clauses, and provisions;

b) Acknowledged all conditions, local, or otherwise, affecting the implementation of the contract;

c) Made an estimate of the facilities available and needed for the contract to be bid, if any;

d) Complied with the responsibility to inquire, or secure the Supplemental Bid Bulletin(s) as provided under ITB Clause 10.4;

e) Ensured that it is not "blacklisted" or barred from bidding by the Government of the Philippines (GoP) or any of its agencies, offices, corporations, or LGUs, including foreign government, or foreign or international financing institutions whose blacklisting rules have been recognized by the GPPB; by itself or by reason of its relation, membership, association, affiliation, or controlling interest with another blacklisted person or entity;

f) Ensured that each of the documents submitted in satisfaction with the bidding requirements is an authentic copy of the original, complete, and that all statements and information provided therein are true and correct;

g) Authorized the HoPE or its duly authorized representative/s to verify all the documents submitted;

h) Ensured that the signatory is the duly authorized representative of the Bidder, and granted full power and authority to do, execute, and perform any and all acts necessary to participate, submit the bid, to sign, and execute the ensuing contract, accompanied by the duly-notarized Special Power of Attorney, Board, or

Partnership Resolution, or Secretary's Certificate, whichever is applicable;

i) Complied with the disclosure provision under Section 81 and 82 of RA No. 12009 and its IRR, in relation to other provisions of RA 3019;

j) Complied with existing labor laws and standards, in the case of procurement of services. Moreover, the Bidder undertakes to:

   i) Ensure the entitlement of workers to wages, hours of work, safety and health and other prevailing conditions of work as established by national laws, rules and regulations; or Collective Bargaining Agreement (CBA); or arbitration award, if and when applicable.

      In case there is a finding by the Procuring Entity or the Department of Labor and Employment (DOLE) of underpayment or non-payment of workers' wages and wage-related benefits, the Bidder agrees that the performance security or portion of the contract amount shall be withheld in favor of the complaining workers pursuant to appropriate provisions of RA No. 12009, without prejudice to the institution of appropriate actions under the Labor Code, as amended, and other social legislations.

   ii) Comply with Occupational Safety and Health Standards (OSHS) and correct deficiencies, if any.

      In case of imminent danger, injury, or death of the worker, the Bidder undertakes to suspend contract implementation pending clearance to resume from the DOLE Regional Office, in compliance with the Work Stoppage Order; and

   iii) Inform the workers of their conditions of work, labor clauses under the contract specifying wages, hours of work, and other benefits under prevailing national laws, rules and regulations; or CBA; or arbitration award, if and when applicable, through posting in two (2) conspicuous places in the establishment's premises.

k) Ensured that it did not give or pay, directly or indirectly, any commission, amount, fee, or any form of consideration, pecuniary or otherwise, to any person or official, personnel, or representative of the government in relation to any procurement project or activity.

l) Examined all instructions, forms, terms, and specifications in the Bidding Documents.

m) Determined and complied with all matters pertaining to the contract to be bid, including but not limited to: (i) the location and the nature of this Project; (ii) climatic conditions; (iii) transportation facilities; and (iv) other factors that may affect the cost, duration, and execution or implementation of this Project.

n) Ensured that all information in the Bidding Documents, including bid or supplemental bid bulletin/s issued, are correct and consistent. The Procuring Entity shall not assume any responsibility regarding erroneous interpretations or conclusions by the prospective or eligible Bidder out of the data furnished by the Procuring Entity.

Failure to observe any of the above responsibilities shall be at the risk of the Bidder concerned.

6.4 Further, the Bidder shall bear all costs associated with the preparation and submission of its Bid, and the Procuring Entity shall in no case be responsible or liable for those costs, regardless of the conduct or outcome of the bidding process.

In case of failure of bidding, the Bidding Documents fee may be applied in the re-bidding for the same Project.

6.5 Furthermore, the Bidder should be aware that the Procuring Entity will accept bids only from those that have paid the applicable fee for the Bidding Documents at the office indicated in the Invitation to Bid.

7) Origin of Goods

Unless otherwise indicated in the **BDS**, there is no restriction on the origin of Goods other than those prohibited by a decision of the United Nations (UN) Security Council taken under Chapter VII of the Charter of the UN.

8) Subcontracts

8.1 Unless otherwise specified in the **BDS**, the Bidder may subcontract portions of the Goods to an extent as may be approved by the HoPE and as stated in the **BDS**. However, the subcontracted portion shall not exceed twenty percent (20%), or a different percentage of the ABC, on a per project basis, as approved by the GPPB.

8.2 Subcontracting of any portion of this Project shall not relieve the Bidder from any liability or obligation that may arise from the contract.

8.3 Subcontractors must meet the eligibility criteria and submit the same eligibility documents as the general contractor. Failure of a subcontractor to meet the eligibility criteria does not affect the eligibility of the general contractor for the Project. In such case, the portion intended to be subcontracted to the ineligible subcontractor shall be assumed by the general contractor.

8.4 Subcontracting arrangement, if allowed, including the time of submission of the eligibility documents of the subcontractor, shall be disclosed in the **BDS.**

B. Contents of Bidding Documents

9) Pre-Bid Conference

9.1 If so specified in the **BDS**, a Pre-Bid Conference shall be held either at the Procuring Entity's physical address and/or online through videoconferencing, webcasting, or similar technology, or a combination thereof, on the date indicated therein, to clarify and address the Bidders' questions on the technical and financial components of this Project.

9.2 The Pre-Bid Conference shall be held at least twelve (12) calendar days before the deadline for the submission and receipt of bids, but not earlier than seven (7) calendar days from the posting of the invitation to bid and other bidding documents in the PhilGEPS.

9.3 Bidders are highly encouraged to attend the Pre-Bid Conference to fully understand the Procuring Entity's requirements. While non-attendance of the Bidder will in no way prejudice its bid. The Bidder is deemed to know any changes and/or amendments to the Bidding Documents, as may be provided in the Supplemental Bid Bulletin.

The proceedings of the Pre-Bid Conference shall be recorded, and the corresponding minutes shall be prepared not later than five (5) calendar days after the Pre-Bid Conference. The minutes shall be made available to prospective Bidders not later than five (5) days upon written request.

9.4 Decisions of the BAC amending any provision of the Bidding Documents shall be issued in writing through a Supplemental Bid Bulletin at least seven (7) calendar days before the deadline for the submission and receipt of bids.

10) Clarification and Amendment of Bidding Documents

10.1 Prospective Bidders may **request for clarification** on and/or interpretation of any part of the Bidding Documents. Such request must be in writing and submitted to the BAC of the Procuring Entity at the address or electronic mail indicated in the **BDS** or through the electronic bidding facility of PhilGEPS, as may be applicable, **at least ten (10) calendar days before the deadline set for the submission and receipt of Bids**.

10.2 The BAC shall respond to the said request by issuing a Supplemental Bid Bulletin duly signed by the BAC Chairperson. It shall be made available to all those who have properly secured the Bidding Documents, at least seven (7) calendar days before the deadline for the submission and receipt of Bids.

10.3 Supplemental Bid Bulletins may also be issued upon the Procuring Entity's initiative for purposes of clarifying or modifying any provision of the Bidding Documents not later than seven (7) calendar days before the deadline for submission and receipt of Bids. Any modification to the Bidding Documents shall be identified as an amendment.

10.4 Any Supplemental Bid Bulletin issued by the BAC shall also be posted in the PhilGEPS, in any conspicuous place in the premises of the

Procuring Entity, and on the website or social media platforms of the Procuring Entity, if available, or such other channels as may be authorized by the GPPB. It shall be the responsibility of all prospective Bidders, including those who have properly secured the Bidding Documents, to inquire and secure Supplemental Bid Bulletins that may be issued by the BAC. However, Bidders who have submitted bids before the issuance of the Supplemental Bid Bulletin must be accordingly informed by the BAC and be allowed to modify or withdraw their bids prior to the deadline for the submission and receipt of bids in accordance with ITB Clause 21.

C. Preparation of Bids

11) Language of Bids

The eligibility requirements or statements, the bids, and all other documents to be submitted to the BAC must be in English. If the eligibility requirements or statements, the bids, and all other documents submitted to the BAC are in foreign language other than English, it must be accompanied by a translation of the documents in English. The documents shall be translated by the relevant foreign government agency, the foreign government agency authorized to translate documents, or a registered translator in the foreign Bidder's country. The Bidder shall cause the authentication of the translated documents and shall be authenticated by the appropriate Philippine foreign service establishment or post or the equivalent office having jurisdiction over the foreign Bidder's affairs in the Philippines. The English translation shall govern, for purposes of interpretation of the bid.

However, for Contracting Parties to the Apostille Convention, the documents shall be authenticated through an apostille by the Competent Authority, as defined in Section 20.9.2 of [the] IRR, except for countries identified by the DFA that will still require legalization (red ribbon) by the relevant Embassy or Consulate.

12) Documents Comprising the Bid: Technical and Financial Components

12.1 The first bid envelope shall contain the following technical documents, including the eligibility documents:

i) PhilGEPS Certificate of Registration (Platinum Membership);

ii) Statement of SLCC;

iii) NFCC Computation or committed Line of Credit (LoC);

iv) Statement of all its ongoing government and private contracts, including contracts awarded but not yet started, if any, whether similar or not similar in nature and complexity to the contract to be bid;

v) *[if applicable]* JVA) or in the absence of a JVA, duly notarized statements from all potential JV partners stating that they will enter into and abide by the provisions of the JVA in the event that the bid is successful;

vi) Bid Security in the prescribed form and amount in accordance with ITB Clause 16, and validity period under ITB Clause 15;

vii) Technical Specifications, which may include production or delivery schedule, manpower requirements, or after-sales service or parts, if applicable;

viii) Omnibus Sworn Statement; and

ix) For foreign Bidders claiming eligibility by reason of their country's extension of reciprocal rights to Filipinos, a certification from the relevant government office of their country stating that Filipinos are allowed to participate in their government procurement activities for the same item or product.

12.2 The second bid envelope shall contain the following financial documents:

a) Bid Form which includes the Bid price;

b) Price Schedules in accordance with ITB Clause 13.1; and

c) *[if applicable]* Certificate of Domestic Preference, in accordance with ITB Clause 25.

12.3 Whenever necessary, modifications may be made to the foregoing components specifically for major and specialized procurement to suit the particular needs of the Procuring Entity, subject to the approval of the GPPB.

12.4 All bids that exceed the ABC shall not be accepted. Unless otherwise indicated in the **BDS**, for foreign-funded procurement, the ABC shall be applied as the ceiling to bid prices provided the following conditions are met:

a) Bidding Documents are obtainable free of charge on a freely accessible website. If payment of Bidding Documents is required by the Procuring Entity, payment could be made upon the submission of bids.

b) The Procuring Entity has procedures in place to ensure that the ABC is based on recent estimates made by the responsible unit of the Procuring Entity and that the estimates reflect the quality, supervision and risk, and inflationary factors, as well as prevailing market prices, associated with the types of works or goods to be procured.

c) The Procuring Entity has trained cost estimators in estimating prices and analyzing bid variances.

d) The Procuring Entity has established a system to monitor and report bid prices relative to ABC and engineer's/procuring entity's estimate.

e) The Procuring Entity has established a monitoring and evaluation system for contract implementation to provide feedback on actual total costs of goods and works.

However, the GoP and the foreign government, or foreign or international financing institutions may agree to waive the foregoing conditions.

13) Bid Prices

13.1 The Bidder shall accomplish the Price Schedule Form as prescribed by the Procuring Entity, which may include the following details:

a) For Goods offered from within the Philippines:

i) The price of the Goods quoted EXW (ex works, ex factory, ex warehouse, ex showroom, or off-the-shelf, as applicable);

ii) The cost of all customs duties and sales and other taxes already paid or payable;

iii) The cost of transportation, insurance, and other costs incidental to delivery of the Goods to their final destination; and

iv) The price of other (incidental) services, if any, listed in the **BDS**.

b) For Goods offered from abroad:

i) Unless otherwise stated in the **BDS**, the price of the Goods shall be quoted Delivery Duty Paid (DDP) with the place of destination in the Philippines as specified in the **BDS**. In quoting the price, the Bidder shall be free to use transportation through carriers registered in any eligible country. Similarly, the Bidder may obtain insurance services from any eligible source country.

ii) The price of other (incidental) services, if any, listed in the **BDS**.

c) For Services, based on the form which may be prescribed by the Procuring Entity, in accordance with existing laws, rules and regulations.

13.2 The Bidder shall accomplish the appropriate Price Schedule included herein, stating the unit prices, total price per item, the total amount and the expected countries of origin of the Goods to be supplied under this Project. The Bidder shall fill in rates and prices for all items of the Goods described in the Price Schedule, which shall be presented and computed using up to two (2) decimal places, unless otherwise indicated in the **BDS.**

13.3 If the Instructions to Bidders specifically allow partial bids, bids not addressing or providing all of the required items in the Bidding Documents including, where applicable, the Price Schedule, shall be considered non-responsive and shall be automatically disqualified. However, when no price or a zero (0) or a dash (-) is indicated in a required item in the bid form, the same shall be construed that it is being offered for free to the Government, except those required by law or regulations to be provided for.

The terms Ex Works (EXW), Cost, Insurance and Freight (CIF), Cost and Insurance Paid to (CIP), (DDP), and other trade terms used to describe the obligations of the parties, shall be governed by the rules prescribed in the current edition of the International Commercial Terms (INCOTERMS) published by the International Chamber of Commerce, Paris.

13.4 Prices quoted by the Bidder shall be fixed during the Bidder's performance of the contract and not subject to variation or price escalation on any account. A bid submitted with an adjustable price quotation shall be treated as non-responsive and shall be rejected.

14) Bid Currencies

14.1 Prices shall be uoted in the following currencies:

a) For Goods that the Bidder will supply from within the Philippines, the prices shall be quoted in Philippine Peso.

b) For Goods that the Bidder will supply from outside the Philippines, the prices may be quoted in the local or tradeable currency/ies accepted by the *Bangko Sentral ng Pilipinas* (BSP), as stated in the **BDS**. However, for purposes of bid evaluation, bids denominated in foreign currencies shall be converted to Philippine currency based on the exchange rate published in the BSP Daily Reference Exchange Rate Bulletin on the day of the bid opening.[3]

14.2 If so allowed in accordance with ITB Clause 14.1, the Procuring Entity, for purposes of bid evaluation and comparing the bid prices, will convert the amounts in various currencies in which the bid price is expressed to Philippine Peso at the foregoing exchange rates.

14.3 Unless otherwise specified in the **BDS**, payment of the contract price shall be made in Philippine Peso.

15) Bid Validity

15.1 Bids shall remain valid for the period specified in the **BDS** which shall not exceed one hundred twenty (120) calendar days from the date of the opening of bids.

15.2 Should it become necessary to extend the validity of the bids and the bid securities beyond one hundred twenty (120) calendar days, the

[3] RA No. 8183, Act to assure uniform value of Philippine coin and currency

Procuring Entity concerned shall request in writing all those who submitted bids for such extension before the expiration date therefor. Bidders, however, shall have the right to refuse to grant such extension without forfeiting their Bid Security.

16) Bid Security

16.1 The Bidder shall at its option, submit a Bid Security in the form and amount as stated in the **BDS**, which may include the following:

Form of Bid Security	Amount of Bid Security (Not less than the required percentage of the ABC)
a) Cash or cashier's or manager's check issued by a bank. *For biddings conducted by LGUs, the Cashier's or Manager's check may be issued by other banks certified by the BSP as authorized to issue such financial instrument.*	Two Percent (2%)
b) Bank draft/guarantee or irrevocable LoC issued by a bank: Provided, however, that it shall be confirmed or authenticated by a local bank, if issued by a foreign bank. *For biddings conducted by LGUs, Bank Draft/Guarantee, or Irrevocable Letter of Credit may be issued by other banks certified by the BSP as authorized to issue such financial instrument.*	Five Percent (5%)
c) Surety bond callable upon demand issued by a surety or insurance company duly certified by the Insurance Commission as authorized to issue such security.	Five Percent (5%)
d) Bid Securing Declaration	Not Applicable

The Bid Security shall be denominated in Philippine Peso and posted in favor of the Procuring Entity.

16.2 The Bid Security should be valid for the period specified in the **BDS**. Any bid not accompanied by an acceptable Bid Security shall be considered as non-responsive and rejected by the Procuring Entity.

16.3 In no case shall the Bid Security be returned later than the expiration of the bid validity period indicated in the **BDS**, unless it has been extended. In case the Bidder is required to extend its bid validity, the Bidder may, at its discretion, substitute a Bid Securing Declaration for the extended period as a replacement of its Bid Security; Provided, that the option to substitute is indicated in the **BDS**.

16.4 Upon signing and execution of the contract pursuant to ITB Clause 30, and the posting of the performance security pursuant to ITB Clause 31, the Bid Security of the successful Bidder will be discharged, but in no case later than its validity period as indicated in the ITB Clause 16.2.

16.5 The Bid Security may be forfeited based on any of the following grounds, as provided under Rule VIII, X, XI, and XXI of the IRR.

a) if a Bidder:

i) Withdraws its bid during the period of bid validity specified in ITB Clause 15;

ii) Does not accept the correction of errors pursuant to ITB Clause 26.5(b) (arithmetical error);

iii) Has a finding against the veracity of any of the documents submitted as stated in ITB Clause 27.2;

iv) Submits eligibility requirements containing false information or falsified documents;

v) Submits bids that contain false information or falsified documents, or the concealment of such information in the bids to influence the outcome of eligibility screening or any other stage of the public bidding;

vi) Allows the use of one's name, or uses the name of another for purposes of public bidding;

vii) Refuses to accept an award or enter into contract with the Government without justifiable cause, after the Bidder had been adjudged as having submitted the Lowest Calculated Responsive Bid (LCRB), Most Economically Advantageous Responsive Bid (MEARB), or Most Advantageous Responsive Bid (MARB);

viii) Refuses or fails to post the required performance security within the prescribed time;

ix) Refuses to clarify or validate in writing its bid during post-qualification within a period of seven (7) calendar days from receipt of the request for clarification;

x) Has any documented attempt by a Bidder to unduly influence the outcome of the bidding in its favor; or

xi) Commits other acts that tend to defeat the purpose of the competitive bidding, Competitive Dialogue, Unsolicited Offer with Bid Matching and Limited Source Bidding, such as but not limited to habitually withdrawing from bidding, submitting late Bids or patently insufficient bid, for at least three (3) times within a year, except for valid reasons.

b) If a winning Bidder:

i) Fails to sign the contract in accordance with ITB Clause 30;

ii) Fails to furnish performance security in accordance with ITB Clause 31; or

iii) Fails to enter into joint venture after the bid is declared successful, in the case of potential JV partners.

17) Format and Signing of Bids

17.1 Bidders shall submit their bids through their duly authorized representative using the appropriate forms provided in Section VIII. Philippine Bidding Document Related Forms on or before the deadline specified in ITB Clause 19 in two (2) separate sealed bid envelopes which shall be submitted simultaneously, whether through manual or online submission. The first shall contain the technical component of the bid, including the eligibility requirements under ITB Clause 12, and the second shall contain the financial component of the bid. This shall also be observed for each lot in the case of lot procurement.

17.2 Forms as mentioned in ITB Clause 17.1 must be completed without any alterations to their format. No substitute form shall be accepted.

17.3 Each and every page of the Bid Form, including the Price Schedule, under Section VIII hereof, shall be signed by the duly authorized representative/s of the Bidder. Failure to do so shall be a ground for the rejection of the bid.

17.4 Any insertions, erasures, or overwriting shall be valid only if they are signed or initialed by the duly authorized representative/s of the Bidder.

18) Sealing and Marking of Bids

18.1 Bidders shall enclose their technical documents described in ITB Clause 12 in one sealed envelope marked “TECHNICAL COMPONENT”, and the financial component in another sealed envelope marked “FINANCIAL COMPONENT”, sealing them all in an outer envelope marked “BID”.

18.2 The Bid as indicated in the Bidding Documents shall be typed or written in ink and shall be signed by the Bidder or its duly authorized representative/s.

18.3 All envelopes shall:

a) contain the name of the contract to be bid in capital letters;

b) bear the name and address of the Bidder in capital letters;

c) be addressed to the Procuring Entity's BAC in accordance with ITB Clause 1.1;

d) bear the specific identification of this bidding process indicated in the ITB Clause 1.1; and

e) bear a warning "DO NOT OPEN BEFORE…" the date and time for the opening of bids, in accordance with ITB Clause 19.

18.4 For manually submitted bid envelopes that are not properly sealed and marked, as required in the Bidding Documents, the same shall be accepted; Provided, That the Bidder or its duly authorized representative shall acknowledge such condition of the bid as submitted. On the other hand, unsealed or unmarked bid envelopes, or bids that cannot be opened or corrupted in case of online submission, shall be rejected.

The BAC shall assume no responsibility for misplaced or lost contents of the improperly sealed or marked bid, or for its premature opening.

D. Submission and Opening of Bids

19) Deadline for Submission of Bids

Bids must be received by the Procuring Entity's BAC at the address indicated in the Invitation to bid**,** or through the e-bidding facility of the PhilGEPS on or before the date and time indicated in the **BDS.**

20) Late Bids

Bids, including the eligibility requirements, submitted after the deadline shall be rejected by the BAC. The BAC shall record in the Minutes of the Meeting the submission and opening of bids, the Bidder's name, its representative, and the time the late bid was submitted.

21) Modification and Withdrawal of Bids

21.1 Bidders may modify their bids before the deadline for the submission and receipt of bids.

a) For manual submission and receipt of bids, the Bidders shall not be allowed to retrieve their original bid but shall only be allowed to submit the bid modification by sending another bid, equally sealed, properly identified, linked to their original bid, marked as a "modification," thereof, and stamped "received" by the BAC. Bid modifications received after the applicable deadline shall not be considered and shall be returned to the Bidder unopened.

b) For online submission of bids, the Bidders shall not be allowed to retrieve their original Bid, but shall only be allowed to submit the bid modification, send another Bid equally secured, properly identified labelled as a "modification" of the one previously

submitted. The time indicated in the latest bid receipt page generated shall be the official time of submission. Bids modification submitted after the applicable deadline shall not be accepted.

21.2 Bidders may withdraw their bids in writing before the deadline for submission and receipt of bids. Withdrawal of bids after the applicable deadline shall be subject to appropriate sanctions as prescribed in the IRR.

Bidders may also express their intention not to participate in the bidding in writing, which should be received by the BAC before the deadline for submission and receipt of bids. Bidders that withdraw their bids shall no longer be allowed to submit another bid for the same contract, directly or indirectly.

21.3 No bid may be modified after the deadline for submission and receipt of bids. Further, no bid may be withdrawn in the interval between the deadline for submission and receipt of bids, and the expiration of bid validity specified by the Bidder in the Financial Bid Form. Withdrawal of bid during this interval shall result in the forfeiture of the Bidder's Bid Security pursuant to ITB Clause 16.5, and the imposition of administrative sanctions as prescribed by RA No. 12009, and without prejudice to the imposition of civil and criminal sanctions as provided under applicable laws.

21.4 Alternative Bids shall be rejected. For this purpose, Alternative Bid shall pertain to an offer made by a Bidder in addition or as a substitute to its original bid, which may be included as part of its original bid or submitted separately. A bid with options shall likewise be considered an Alternative Bid regardless of whether said bid proposal is contained in a single envelope or submitted in two (2) or more separate bid envelopes.

21.5 Each Bidder shall submit only one Bid, either individually or as a partner in a JV. Bidder who submits or participates in more than one bid (other than as a subcontractor if a subcontractor is permitted to participate in more than one bid) will cause all the proposals with the Bidder's participation to be disqualified. This shall be without prejudice to any applicable criminal, civil, and administrative penalties that may be imposed upon the persons and entities concerned.

22) Opening and Preliminary Examination of Bids

22.1 The BAC shall open the bids in public, immediately after the deadline for submission and receipt of bids, as specified in the **BDS**. In case the Bids cannot be opened as scheduled due to justifiable reasons, the BAC shall take custody of the submitted Bids and reschedule the opening of Bids on the next working day or at the soonest possible time, through the issuance of a notice of postponement to be posted on the PhilGEPS website and the website of the Procuring Entity concerned.

22.2 The manner of opening of the bids for Goods shall depend on the award criterion to be adopted as follows:

a) For LCRB and MEARB, the BAC shall open the technical and financial proposals on the same day; and

b) For MARB, only the technical proposals shall be opened on the same day while the financial proposals shall remain unopened and shall be kept securely by the BAC until the specified time of their opening as indicated in the **BDS.** Only the financial proposals of the Bidders who have met the highest technical score for Most Advantageous Bid (MAB) shall be opened.

22.3 The Procuring Entity shall prepare the minutes of the proceedings of the bid opening that shall include, as a minimum: (a) names of Bidders, their bid price (per lot, if applicable, and/or including discount, if any), bid security, findings of preliminary examination, and whether there is a withdrawal or modification; and (b) attendance sheet. The BAC members shall sign the abstract of bids as read.

22.4 The Bidders or their duly authorized representatives may attend the opening of bids. The BAC shall ensure the integrity, security, and confidentiality of all submitted bids. The Abstract of Bids, as read, and the minutes of the bid opening shall be made available to the public, upon written request and payment of a specified fee to recover the cost of materials.

22.5 To ensure transparency and accurate representation of the bid submission, the BAC Secretariat, shall notify in writing all Bidders whose bids it has received through its PhilGEPS-registered physical address or official e-mail address. The said notice shall be issued within seven (7) calendar days from the date of the bid opening.

E. Evaluation and Comparison of Bids

23) Process to be Confidential

23.1 Members of the BAC, its staff and personnel, Secretariat, and TWG, as well as Observers, are prohibited from making or accepting any communication with any Bidder regarding the evaluation of their bids until the issuance of the Notice of Award, unless otherwise allowed in ITB Clause 24.

23.2 Any effort by a Bidder to influence the Procuring Entity in its decision in respect of bid evaluation, bid comparison or contract award will result in the rejection of the bid.

24) Clarification of Bids

To assist in the evaluation, comparison, and post-qualification of the bids, the Procuring Entity may ask in writing any Bidder for a clarification of its bid. All responses to requests for clarification shall be in writing. Any clarification submitted by a Bidder in respect to its bid that is not in response to the request of the Procuring Entity shall not be considered.

25) Domestic Preference

25.1 The Procuring Entity shall give priority and preference to Philippine products and services. The preference and priority for Philippine products shall be guaranteed at all levels of the procurement process, including raw materials, ingredients, supplies, or fixtures.

25.2 For a period of ten (10) years from the effectivity of RA No. 11981 or the "*Tatak Pinoy* (Proudly Filipino) Act," and for Philippine products and services in sectors and economic activities covered by the prevailing Tatak Pinoy Strategy, the Procuring Entity is mandated to award the contract to the domestic Bidder for Philippine products and services in sectors and economic activities covered by the prevailing *Tatak Pinoy* Strategy (TPS).

Domestic Bidder, for purposes of this provision, refers to any person or entity offering unmanufactured articles, materials, or supplies grown or produced in the Philippines, or manufactured articles, materials, or supplies manufactured or to be manufactured in the Philippines substantially from articles, materials, or supplies that are or will be produced or manufactured in the Philippines, as the case may be.

25.3 After the said ten-year period, the domestic preference shall be subject to a margin of preference to be determined by the *Tatak Pinoy* Council which shall not be lower than fifteen percent (15%).

25.4 For products and services governed by the TPS, the domestic preference in procurement shall be in accordance with the IRR or guidelines issued for the *Tatak Pinoy Act.*

25.5 The Procuring Entity shall award the Project to the domestic Bidder if the bid is not more than twenty-five percent (25%) in excess of the lowest foreign bid. The margin of preference provided herein shall be subject to periodic review and adjustment by the GPPB, as may be necessary.

25.6 A Domestic Bidder can only claim preference if it secures from the appropriate agency a certification that the articles forming part of its bid are substantially composed of articles, materials, or supplies grown, produced, or manufactured in the Philippines.

25.7 The preference herein established may be waived should any of the following conditions be present as provided in the **BDS**:

a) Where domestic production is insufficient or unavailable in the required commercial quantities;

b) Where the specific or desired quality is not met;

c) Where domestic preference will result in inconsistencies with the Philippines' obligations under treaty or international or executive agreements; or

d) Other analogous circumstances.

26) Detailed Evaluation and Comparison of Bids

26.1 The Procuring Entity's evaluation of bids shall be based on the bid price quoted in the Bid Form, which includes the Price Schedule.

26.2 The Procuring Entity will undertake the detailed evaluation and comparison of the bids which have passed the opening and preliminary examination of bids, pursuant to ITB Clause 22, to determine the Lowest Calculated Bid (LCB), Most Economically Advantageous Bid (MEAB), and MAB.

26.3 The award criterion shall be determined as follows:

a) For LCB

i) The detailed evaluation of the financial component of the bids, to establish the correct calculated prices of the bids; and

ii) The ranking of the total bid prices as so calculated from the lowest to the highest, where the bid with the lowest price shall be identified as the LCB.

b) For MEAB, the BAC shall evaluate the quality and price proposals to determine the Most Economically Advantageous Bid (MEAB) using the following steps:

i) The quality proposal together with the price proposal shall be considered in the evaluation of bids. The quality proposals shall be evaluated first using the criteria in the **BDS**. The price proposals of the bids that meet the minimum quality score shall then be opened.

ii) The price and quality proposals shall be given corresponding weights with the price proposal given a minimum weight of fifteen percent (15%) up to a maximum of forty percent (40%). The weight of the quality criteria shall be adjusted accordingly such that their total weight in percent together with the weight given to the price proposal shall be equal to one hundred percent (100%).

iii) To further promote green public procurement, the sustainability of products, or materials with green specifications shall be given greater weight in the evaluation of bids. As approved by the BAC, the exact weights shall be indicated in the **BDS**. The BAC shall rank the Bidders in descending order based on the combined numerical ratings of their quality and price proposals. The Bidder with the best overall score using the quality-price ratio shall be referred to as the MEAB.

iv) The HoPE shall approve or disapprove the recommendations of the BAC within two (2) calendar days after receipt of the results of the evaluation from the BAC.

c) For MAB

i) BAC shall evaluate the quality proposals to determine the MAB using the quality components. The quality components shall be assessed on the basis of the criteria with corresponding numerical weights indicated in the **BDS** to determine the Bidder with the highest technical rating.

ii) The second bid envelope of the Bidder obtaining the highest technical rating shall be opened. If the financial proposal is equal to or lower than the ABC, the bid shall be accepted and determined as the MAB; otherwise, the same shall be rejected and the Bidder will be disqualified.

26.4 In order to eliminate bias in evaluating the quality proposals, it is recommended that the highest and lowest scores for each Bidder for each criterion shall not be considered in determining the average scores of the Bidders, except when the evaluation is conducted in a collegial manner.

26.5 The BAC shall immediately conduct a detailed evaluation of all bids using non-discretionary criteria in considering the following:

a) Completeness of the bid. Unless the **BDS** allows partial bids, bids not addressing or providing all of the required items in the **BDS**, shall be considered non-responsive and, thus, automatically disqualified.

However, when no price or a zero (0) or a dash (-) is indicated in a required item in the bid form, the same shall be construed that it is being offered for free to the Government, except those required by law or regulations to be provided for; and

b) Arithmetical corrections. The BAC shall apply arithmetical corrections on computational errors and omissions to enable proper comparison of all eligible bids. Bid corrections may also be considered if expressly allowed in the **BDS**. Any adjustment shall be calculated in monetary terms to determine the calculated prices.

26.6 Based on the detailed evaluation of bids, those that comply with the above-mentioned requirements shall be ranked in the ascending order of their total calculated bid prices, as evaluated and corrected for computational errors, discounts and other modifications, to identify the LCB, MEAB, or MAB. Total calculated bid prices, as evaluated and corrected for computational errors, discounts and other modifications, which exceed the ABC shall not be considered, unless otherwise indicated in the **BDS**.

26.7 The BAC shall evaluate all bids on an equal footing to ensure fair and competitive bid comparison. For this purpose, all Bidders shall be required to include in their bids the cost of all taxes, such as, but not limited to, value added tax (VAT), income tax, local taxes, and other fiscal levies and duties, whichever is applicable, as itemized in the bid

form and reflected in the detailed estimates. Such bids, including said taxes, shall be the basis for bid evaluation and comparison.

26.8 If so indicated pursuant to ITB Clause 1.2, bids may be submitted for individual lots or for any combination thereof, provided that all bids and combinations of bids shall be received by the same deadline and opened and evaluated simultaneously so as to determine the Bid or combination of Bids offering the lowest calculated cost to the Procuring Entity. Bid prices quoted shall correspond to all items specified for each lot and to all quantities specified for each item of a lot. Bid Security as required by ITB Clause 16 shall be submitted for each contract (lot) separately. The basis for evaluation of lots is specified in **BDS** Clause 26.5.

26.9 In order to eliminate bias in evaluating the quality proposals, it is recommended that the highest and lowest scores for each Bidder for each criterion shall not be considered in determining the average scores of the Bidders, except when the evaluation is conducted in a collegial manner.

27) Post-Qualification

27.1 The BAC shall determine to its satisfaction whether the Bidder that is evaluated as having submitted the LCB, MEAB, or MAB as the case may be, complies with and is responsive to all the requirements and conditions specified in ITB Clauses 5, 12.1, and 12.2. The Bidder, within five (5) calendar days from receipt of notice from the BAC that it submitted the LCB, MEAB, or MAB shall submit all the eligibility documents supporting its PhilGEPS Certificate of Registration (Platinum Membership), its latest income and business tax returns filed for the preceding quarter which should not be earlier than two (2) quarters from the date of submission and receipt of bid, and other appropriate licenses and permits required by law and stated in the **BDS**.

27.2 Failure to submit any of the post-qualification requirements on time, or a finding against the veracity thereof, shall disqualify the Bidder for award; Provided, That in the event that a finding against the veracity of any of the documents submitted is made, it shall cause the forfeiture of the Bid Security.

27.3 The determination shall be based upon an examination of the documentary evidence of the Bidder's qualifications submitted pursuant to ITB Clauses 12.1 and 12.2, as well as other information as the Procuring Entity deems necessary and appropriate, using a non-discretionary "pass/fail" criterion, which shall be completed within a period of twelve (12) calendar days.

27.4 If the BAC determines that the Bidder with the LCB, MEAB, or MAB fails to meet the post-qualification criteria, it shall immediately notify the said Bidder in writing of its post-disqualification and the grounds for such determination.

27.5 Immediately after the BAC has notified the first Bidder of its post-disqualification, and notwithstanding any pending request for reconsideration thereof, the BAC shall initiate and complete the same

post-qualification process on the Bidder with the second LCB, MEAB, or MAB. If the second Bidder passes the post-qualification and the request for reconsideration of the first Bidder has been denied, the second Bidder shall be post-qualified as the Bidder with the LCB, MEAB, or MAB.

27.6 If the second Bidder, however, fails the post-qualification, the procedure for post-qualification shall be repeated for the Bidder with the next LCB, MEAB, or MAB and so on, until the LCRB, MEARB, MARB, as the case may be, is determined for award, subject to the procedure of Notice and Execution of Award.

27.7 If the BAC determines that the Bidder with the LCB, MEAB, or MAB passes all the criteria for post-qualification, it shall declare the said bid as the LCRB, MEARB, MARB, Single Calculated Responsive Bid (SCRB), Single Economically Advantageous Responsive Bid (SEARB), or Single Advantageous Bid (SARB).

27.8 Within a period not exceeding ten (10) calendar days from the determination and declaration through a resolution by the BAC of the LCRB, MEARB, MARB, SCRB, SEARB, or SARB, as the case may be, and the recommendation of the award, the HoPE or its duly authorized representative shall approve or disapprove the said recommendation.

27.9 In case of approval, the HoPE or its duly authorized representative shall immediately issue the Notice of Award to the Bidder with the LCRB, MEARB, MARB, SCRB, SEARB, or SARB, as the case may be.

In the event that the approving authority shall disapprove the resolution on the award of the contract, such disapproval shall be based only on valid, reasonable, and justifiable grounds to be expressed in writing. A copy of the decision disapproving the resolution shall be furnished to the BAC and the Bidder.

28) Reservation Clause

28.1 Notwithstanding the eligibility or post-qualification of a Bidder and without incurring any liability, the HoPE or its duly authorized representative at any stage of the procurement, reserves the right to review its qualifications, reject any and all bids, declare a failure of bidding or not award the contract in the following situations:

a) If it has reasonable grounds to believe that a misrepresentation has been made by the said Bidder, or that there has been a change in the Bidder’s capability to undertake the project from the time it submitted its eligibility requirements.

b) Should such review uncover any misrepresentation made in the eligibility and bidding requirements, statements or documents, or any changes in the situation of the Bidder which will adversely affect its capability to undertake the Project so that it no longer meets the prescribed eligibility or bid evaluation criteria, the Procuring Entity shall consider the said Bidder as ineligible and disqualify it from participating further in the bidding process or being awarded the contract.

28.2 Based on any of the following grounds, the Procuring Entity reserves the right to reject any and all bids, declare a Failure of Bidding at any time prior to the contract award, or not to award the contract, without thereby incurring any liability, and make no assurance that a contract shall be entered into as a result of the bidding:

a) If there is *prima facie* evidence of collusion between appropriate public officers or employees of the Procuring Entity, or between the BAC and any of the Bidders, or if the collusion is between or among the Bidders themselves, or between a Bidder and a third party, including any act which restricts, suppresses or nullifies, or tends to restrict, suppress or nullify competition or influences or tends to influence the bidding process;

b) If the BAC is found to have failed in complying with the applicable law or in following the prescribed bidding procedures; or

c) If there are any justifiable and reasonable ground where the award of the contract will not redound to the benefit of the government, in instances where (i) the physical and economic conditions have significantly changed so as to render the Project no longer economically, financially, or technically feasible as determined by the HoPE; (ii) the Project is no longer necessary as determined by the HoPE; and (iii) the source of funds for the Project has been withheld or reduced through no fault of the Procuring Entity.

F. Award of Contract

29) Contract Award

29.1 Subject to ITB Clause 27, the HoPE or its duly authorized representative shall award the contract to the Bidder whose bid has been determined to be the LCRB, MEARB, MARB, SCRB, SEARB, or SARB, as the case may be.

29.2 Prior to the expiration of the period of bid validity, the Procuring Entity shall notify the successful Bidder in writing that its bid has been accepted, through a Notice of Award duly received by the Bidder or its representative personally or sent by registered mail or electronically, receipt of which must be confirmed in writing within two (2) days by the Bidder with the LCRB, MEARB, MARB, SCRB, SEARB, or SARB, as applicable and submitted personally or sent by registered mail or electronically to the Procuring Entity.

29.3 Within ten (10) calendar days from receipt by the winning Bidder of the Notice of Award, the following conditions should be complied with before the contract may be awarded:

a) Submission of the following documents:

i) Valid JVA, if applicable; or

ii) The SEC Certificate of Registration of the foreign corporation, if applicable.

b) Posting of the performance security in accordance with ITB Clause 31; and

c) Signing of the contract as provided in ITB Clause 30.

29.4 At the time of contract award, the Procuring Entity shall not increase or decrease the quantity of goods originally specified in Section VI. Schedule of Requirements.

30) Signing of the Contract

30.1 Within ten (10) calendar days from receipt of the Notice of Award, the winning Bidder shall (i) post the required performance security, sign and date the contract, and return it to the Procuring Entity.

30.2 The Procuring Entity shall enter into a contract with the successful Bidder within the same ten (10) calendar day period, provided that all the documentary requirements are complied with.

30.3 The following documents shall form part of the contract:

a) Contract Agreement;

b) Bidding Documents;

c) Winning Bidder's bid, including the technical and financial proposals, and all other documents/statements submitted (*e.g.,* Bidder's response to request for clarifications on the bid), including corrections to the bid, if any, resulting from the Procuring Entity's bid evaluation;

d) Performance Security;

e) Notice of Award of Contract; and

f) Other contract documents that may be required by existing laws and/or specified in the **BDS**.

31) Performance Security

31.1 To guarantee the faithful performance of its obligations under the contract, the winning Bidder shall post a performance security prior to the signing of the contract. Furthermore, the successful Bidder shall be required to update the performance security posted before the issuance of an amendment to order if any.

31.2 Sectors enumerated under Section 76.1[4] of the IRR may be allowed to post a Performance Securing Declaration (PSD) as specified in the **BDS.**

31.3 The performance security shall be in any form selected by the Procuring Entity in the amount indicated in the **BDS**, which shall not be less than the percentage of the total contract price in accordance with the following price schedule:

Form of Performance Security	Amount of Performance Security (Not less than the Percentage of the Total Contract Price)
a. Cash or Cashier's or Manager's check issued by a bank. *For biddings conducted by LGUs, the Cashier's or Manager's check may be issued by other banks certified by the BSP as authorized to issue such financial instrument.*	Five percent (5%)
b. Bank draft or guarantee or irrevocable Letter of Credit issued by a local bank. If issued by a foreign bank, it shall be confirmed or authenticated by a local bank.	
ii. Surety bond callable upon demand issued by a surety or insurance company duly certified by the IC as authorized to issue such security.	Thirty Percent (30%)

31.4 The performance security shall be denominated in Philippine Peso and posted in favor of the Procuring Entity, which shall be forfeited in the event it is established that the winning Bidder is in default in any of its obligations under the contract.

---

[4] Section 76.1 The GPPB, once data is available from relevant agencies, shall maintain a registry of entities belonging to the following sectors:

a) Farmers, as certified by the Department of Agriculture (DA);
b) Fisherfolk as certified by the Bureau of Fisheries and Aquatic Resources (BFAR);
c) Persons with disabilities as certified by the National Council for Disability Affairs (NCDA) pursuant to RA No. 7277, otherwise known as the Magna Carta for Disabled Persons, as amended;
d) Solo parents as certified by the Department of Social Welfare and Development (DSWD);
e) Microenterprises and social enterprises as certified by the MSMED Council;
f) Startups, Spin-offs, and other forms of entity involved in Science, Technology, and Innovation (DOST), as may be applicable;
g) Cooperatives duly registered with the CDA pursuant to RA No. 6938, otherwise known as the Cooperative Code of the Philippines, as amended; and
h) Other relevant sectors as may be determined by the GPPB to ensure inclusivity and diversity in the procurement process.

32) Notice to Proceed

The Procuring Entity shall issue the Notice to Proceed to the winning Bidder not later than three (3) calendar days from the date of approval of the contract by the appropriate signatories. All notices called for by the terms of the contract shall be effective only at the time of receipt thereof by the successful Bidder.

33) Protest Mechanism

Decisions of the BAC in all stages of procurement may be protested to the HoPE in accordance with Section 83 of the IRR.

Section III. Bid Data Sheet

Bid Data Sheet

ITB Clause	
1.1	The Procuring Entity is **DOE.** The Project title is **Supply, Delivery, Installation, Testing and Commissioning of Mobile Energy System (MES).** The identification number of the Contract is **Purchase Request No. 05-0151-2026-09-0577/05-0151-2026-0578.** *[**Note**: The Project Identification Number may be assigned by the Procuring Entity based on its own coding system or the PhilGEPS reference number generated after the posting of the bid opportunity on the PhilGEPS website.]*
1.2	The number of lot(s): **Four (4)**.
2	The Funding Source is: 2.1 The GoP through the source of funding as indicated below for **CY2026 GAA** in the amount of **Php513,500,000.00.** 2.2 The source of funding is: **a) NEP, the National Expenditure Program.**
3.1	No further instructions.
5.2	Foreign Bidders, except those falling under ITB Clause 5.2(b), may not participate in this Project.
5.4	The Bidder's SLCC similar to the contract to be bid should have been completed **within five (5) years** prior to the deadline for the submission and receipt of bids.
5.5	**Not Applicable.**
7	No further instructions.
8.1	**Subcontracting is allowed.**
8.4	No further instruction
9.1	The **DOE** will hold a Pre-Bid Conference on **8:00AM on 02 October 2026** at the **DOE-Databank Training Room** which shall be open to prospective Bidders. You may refer to the link provided to confirm your participation and attendance.

	 **https://forms.office.com/r/ZUBry2BKSJ?origin=lprLink**
10.1	The Procuring Entity's address is: Procurement Management Division G/F DOE Annex Bldg., Energy Center, Rizal Drive cor. 34th Street, Bonifacio Global City, Taguig City, Philippines 1632
12.4	The ABC is **Php513,500,000.00.** Any bid with a financial component exceeding the amount shall not be accepted.
13.1(a)(iv)	**No incidental services are required.**
13.1(b)(i)	**The price of the Goods shall be quoted DDP at:** **DOE Main Bldg., Energy Center, Rizal Drive cor. 34th Street Bonifacio Global City, Taguig City, Philippines 1632**
13.1(b)(ii)	**No incidental services are required.**
13.2	No further instructions.
14.1(b)	**The Bid prices for Goods supplied from outside of the Philippines shall be quoted in Philippine Peso.**
14.3	**No further Instruction**
15.1	Bids will be valid for **one hundred twenty (120)** days from bid opening.
16.1	The Bid Security shall be in the form of a Bid Securing Declaration, **or** any of the following: **1) The amount of not less than 2% of ABC if Bid Security is in cash;**

	2) The amount of not less than 2% of ABC, if Bid Security is in manager's check; **3) The amount of not less than 5% of ABC, if Bid Security is irrevocable LoC; or** 4) **The amount of not less than 5% of ABC, if Bid Security is Surety Bond.**
16.2	The Bid Security shall be valid until **13 February 2027.**
16.3	Substitution of the bid security is not allowed
19	The address for the submission of Bids is: **Annex Lobby** **Procurement Management Division** **Department of Energy** **G/F-Annex Building, Energy Center** **Rizal Drive cor. 34th Street, Bonifacio Global City** **Taguig City, Philippines 1632** The deadline for the submission of Bids is on or before 8:00AM of **16 October 2026.**
22.1	The place of the bid opening is. **DOE- EUMB Conference Room** **3/F DOE Annex Bldg., Energy Center,** **Rizal Drive cor. 34th Street, Bonifacio Global City,** **Taguig City, Philippines 1632** The date and time of bid opening is on **9:00AM of 16 October 2026.**
22.2(b)	**Not applicable**
25.7	No further instructions.
26.3(b)(i)	The quality component shall be assessed on the basis of criteria with corresponding numerical weights, which may include qualitative, environmental, or social aspects linked to the subject matter of the contract. These may include any or a combination of the following: a) Quality and technical merit, including technical competence and a credible track record; b) Aesthetic and functional design and characteristics; c) Approach and methodology; d) Accessibility; e) Tools and equipment; f) Social, environmental, economic, and innovative characteristics; g) Organization, qualification, and experience of employees or staff assigned to perform the contract; h) Ongoing contracts and work commitments; i) After-sales service and technical assistance; j) Delivery conditions, such as delivery period and delivery process;

<table>
<tr><td></td><td>k) Disposal measures; or
l) Other relevant criteria in relation to the subject Goods or Infrastructure Projects to be procured.</td></tr>
<tr><td>26.3(b)(iii)</td><td>Not applicable.</td></tr>
<tr><td>26.3(c)(i)</td><td>The corresponding numerical weights for MAB:
Not applicable.</td></tr>
<tr><td>26.5(a)</td><td>Partial bid is not allowed. The goods are grouped in a single lot and the lot shall not be divided into sub-lots for the purpose of bidding, evaluation, and contract award.

In all cases, the NFCC computation, if applicable, must be sufficient for all the lots or contracts to be awarded to the Bidder.

<table>
<tr><th>Lot No.</th><th>Description</th><th>ABC (Php)</th></tr>
<tr><td>1</td><td>MES integrated in vehicle</td><td>80,000,000.00</td></tr>
<tr><td>2</td><td>MES (towable) for disaster response</td><td>116,200,000.00</td></tr>
<tr><td>3</td><td>MES (towable) for electrification, including Specialized Outlet (DLE-compatible)</td><td>174,800,000.00</td></tr>
<tr><td>4</td><td>MES (towable) with hybrid controller with NPC SPUG Existing Generator</td><td>142,500,000.00</td></tr>
<tr><td></td><td>TOTAL ABC:</td><td>513,500,000.00</td></tr>
</table>
</td></tr>
<tr><td>26.5(b)</td><td>Arithmetical correction is allowed.</td></tr>
<tr><td>26.6</td><td>No further instructions.</td></tr>
<tr><td>27.1</td><td>No additional requirements on Licenses or permits.</td></tr>
<tr><td>30.3(f)</td><td>No additional contract documents is required.</td></tr>
<tr><td>31.2</td><td>Not Applicable.</td></tr>
<tr><td>31.3</td><td>The Performance Security shall be in the form:</td></tr>
</table>

		Form of Performance Security	Amount of Performance Security (Not less than the Percentage of the Total Contract Price)
		a. Cash or Cashier's or Manager's check issued by a bank. *For biddings conducted by LGUs, the Cashier's or Manager's check may be issued by other banks certified by the BSP as authorized to issue such financial instrument.*	Five percent (5%)
		b. Bank draft or guarantee or irrevocable Letter of Credit issued by a local bank. If issued by a foreign bank, it shall be confirmed or authenticated by a local bank.	
		c. Surety bond callable upon demand issued by a surety or insurance company duly certified by the IC as authorized to issue such security.	Thirty Percent (30%)

Section IV. General Conditions of Contract

Notes on the General Conditions of Contract

The GCC in Section IV, read in conjunction with the SCC in Section V and other documents listed therein, should be a complete document expressing all the rights and obligations of the parties.

The GCC herein shall not be altered. Any changes and complementary information which may be needed shall be introduced only through the SCC in Section V.

Table of Contents

Section IV. General Conditions of Contract 52

1)..... General Terms
.....55

2).....Corrupt, Fraudulent, Collusive, and Coercive Practices
.....55

3).....Inspection and Audit by the Funding Source
..... 55

4).....Governing Law and Language
..... 55

5).....Notices
..... 55

6)..... Scope of Contract
..... 56

7)..... Subcontracting
..... 56

8)..... Procuring Entity's Responsibilities
..... 57

9).....Prices
..... 57

10).....Advance Payment
..... 57

11)..... Payment
..... 58

12).....Taxes and Duties
..... 59

13).....Performance Security
..... 59

14)..... Use of Contract Documents and Information
..... 59

15).....Standards
..... 60

16)..... Inspection and Tests
..... 60

17).....Warranty
..... 61

18)..... Delays in the Supplier's Performance
..... 61

19)..... Liquidated Damages
..... 62
20)..... Settlement of Disputes
..... 62
21)..... Liability of the Supplier
..... 63
22)..... Termination for Breach of Contract
..... 63
23)..... Termination Due to Force Majeure
..... 63
24)..... Termination for Convenience
..... 64
25)..... Termination for Unlawful Acts
..... 65
26)..... Procedures for Termination of Contracts
..... 65
27)..... Assignment of Rights
..... 66
28)..... Amendment to Order
..... 67
29)..... Application
..... 67

Section V. Special Conditions of Contract 68

2) General Terms

In this Contract, the following terms shall be interpreted as indicated:

a) "The Procuring Entity" means the organization purchasing the Goods, as named in the **SCC**.

b) "The Supplier" means the individual contractor, manufacturer distributor, or firm supplying/manufacturing the Goods and Services under this Contract and named in the **SCC**.

c) The "Funding Source" means the organization named in the **SCC**.

d) "The Project Site" where applicable, means the place or places named in the **SCC**.

3) Corrupt, Fraudulent, Collusive, and Coercive Practices

Unless otherwise provided in the **SCC**, the Procuring Entity as well as the Bidders, Contractors, or Suppliers shall observe the highest standard of ethics during the procurement and execution of this Contract. Further the Funding Source, as appropriate, will seek to impose the maximum civil, administrative, and/or criminal penalties available under the applicable law on individuals and organizations deemed to be involved with any of the practices mentioned in ITB Clause 3.1(a).

4) Inspection and Audit by the Funding Source

The Supplier shall allow the Funding Source to inspect its accounts and records related to the performance of its obligations. If the Funding Source requires a separate audit, it shall appoint its auditor and bear the cost thereof.

5) Governing Law and Language

This Contract shall be interpreted in accordance with the laws of the Republic of the Philippines.

This Contract has been executed in the English language, which shall be the binding and controlling language for all matters relating to the meaning or interpretation of this Contract. All correspondence and other documents pertaining to this Contract exchanged by the parties shall be written in English.

6) Notices

5.1 Any notice, request, or consent required or permitted to be given or made pursuant to this Contract shall be in writing. Any such notice, request, or consent shall be deemed to have been given or made when received by the concerned party, either in person or through an authorized representative of the Party to whom the communication is addressed, or when sent by registered mail or electronic mail, to such Party at the address specified in the **SCC**, which shall be effective when delivered and duly received, as may be applicable.

5.2 A Party may change its address upon notice pursuant to the provisions listed in the **SCC.**

7) Scope of Contract

6.1 The Goods to be provided shall be as specified in Section VI. Schedule of Requirements.

6.2 This Contract shall include all such items, although not specifically mentioned, that can be reasonably inferred as being required for its completion as if such items were expressly mentioned herein. Any additional requirements for the completion of this Contract shall be provided in the **SCC**.

8) Subcontracting

7.1 For subcontracting arrangements, the following rules shall apply for both locally-funded projects and projects financed through Official Development Assistance, except those covered by treaty, or international, or executive agreements.

a) The subcontracted portion of the contract shall be subject to the approval of the HoPE and the following conditions:

i) The subcontracted portion shall not exceed twenty percent (20%) for Goods, or a different percentage on a per project basis, as approved by the GPPB. The threshold percentages fixed herein shall be subject to the periodic review and adjustments as may be deemed appropriate by the GPPB; and

ii) The subcontracted portion shall be limited to components that are not deemed "significant or material" to the Project, as determined by the Procuring Entity.

b) Subcontracting arrangement, if allowed, including the time of submission of the eligibility documents of the subcontractor, shall be disclosed in the Bidding Documents;

c) Subcontractors must meet the eligibility criteria and submit the same eligibility documents as the general contractor.

Failure of a subcontractor to meet the eligibility criteria does not affect the eligibility of the general contractor for the procurement project. In such case, the portion intended to be subcontracted to the ineligible subcontractor shall be assumed by the general contractor;

d) The general contractor shall remain liable for the subcontractor’s actions, defaults, delays, and negligence;

e) The general contractor and the subcontractor are obliged to comply with the provisions of the contract and shall share liability, jointly and severally, in cases of violation of safety standards or other labor standards insofar as the subcontracted portion is concerned; an

f) For purposes of post-qualification in accordance with its objective and process under the IRR, the value of the entire completed and accepted Project, including the subcontracted portion, shall be credited as experience of the general contractor. In the case of the subcontractor, the following rules shall apply:

i) The subcontractor shall get credit for one hundred percent (100%) of the value of the subcontracted portion of the project performed; and

ii) Subcontractors shall be eligible to concessional windows of GFIs that treat receivables from the government as loan security; the receivables of subcontractors due from their general contractor shall similarly be accepted as loan security by GFIs.

9) Procuring Entity's Responsibilities

8.1 Whenever the performance of the obligations in this Contract requires that the Supplier obtain permits, approvals, import, and other licenses from local public authorities, the Procuring Entity may assist the Supplier in complying with such requirements in a timely and expeditious manner.

8.2 The Procuring Entity shall pay all costs involved in the performance of its responsibilities in accordance with the Scope of Contract.

10) Prices

9.1 For goods and services covered under this Contract, as awarded, all bid prices shall be deemed fixed and not subject to price escalation during contract implementation, except as otherwise provided in the succeeding provisions.

9.2 Prices charged by the Supplier for Goods delivered and/or services performed under this Contract shall not vary from the prices quoted by the Supplier in its bid, unless there is a change in price resulting from Amendment to Order issued in accordance with **GCC**

9.3 Clause 28.

11) Advance Payment

10.1 For Goods sourced from within the Philippines, advance payments may be made as follows:

a) A single advance payment not to exceed fifty percent (50%) of the contract amount shall be allowed for contracts entered into by a Procuring Entity for the following services where the requirement of down payment is a standard industry practice: 1) hotel and restaurant services; 2) use of conference/seminar and exhibit areas; and 3) lease of office space;

b) Advance payment not to exceed fifteen percent (15%) of the contract amount, unless otherwise directed by the President, shall also be allowed for procurement of goods required to address contingencies arising from natural or man-made calamities in areas where a "State of Calamity" has been declared by appropriate authorities; and

c) Upon submission of an irrevocable Letter of Credit (LoC) or bank guarantee issued by local bank, advance payment not exceeding fifteen percent (15%) of the contract amount shall be allowed and paid to the Supplier within sixty (60) calendar days from the signing of the contract. The irrevocable LoC or bank guarantee, which must be for an equivalent amount, shall remain valid until the goods are delivered, and accompanied by a claim for advance payment.

10.2 For Goods supplied from abroad, unless otherwise indicated in the **SCC**, the terms of payment shall be as follows:

a) Upon Contract Signing: Fifteen Percent (15%) of the Contract Price shall be paid within sixty (60) days from signing of the Contract and upon submission of a claim and a bank guarantee for the equivalent amount valid until the Goods are delivered and in the form provided in Section VIII. PBD Related Forms.

b) Upon Delivery: Sixty-five percent (65%) of the Contract Price shall be paid to the Supplier within sixty (60) days after the date of receipt of the Goods and upon submission of the documents (i) through (vi) specified in the SCC provision on Delivery and Documents.

c) Upon Acceptance: The remaining twenty percent (20%) of the Contract Price shall be paid to the Supplier within sixty (60) days after the date of submission of the acceptance and inspection certificate for the respective delivery issued by the Procuring Entity's authorized representative. In the event that no inspection or acceptance certificate is issued by the Procuring Entity's authorized representative within forty-five (45) days of the date shown on the delivery receipt, the Supplier shall have the right to claim payment of the remaining twenty percent (20%) subject to the Procuring Entity's own verification of the reason(s) for the failure to issue documents (vii) and (viii) as described in the SCC provision on Delivery and Documents.

10.3 All progress payments for Goods shall first be charged against the advance payment until the latter has been fully exhausted.

12) Payment

11.1 Payments shall be made only upon a certification by the HoPE that the Goods have been delivered in accordance with the terms of this Contract and have been duly inspected and accepted**.** Except with the prior approval of the President, no payment shall be made for services not yet rendered or for supplies and materials not yet delivered under the Contract.

11.2 The Supplier's request(s) for payment shall be made to the Procuring Entity in writing, accompanied by an invoice describing, as appropriate, the Goods delivered and/or Services rendered, and by documents submitted

pursuant to the SCC provision for **GCC** Clause 6.2, and upon fulfillment of other obligations stipulated in this Contract;

11.3 Pursuant to **GCC** Clause 11.2, payments shall be made promptly by the Procuring Entity after submission of an invoice or claim by the Supplier. Payments shall be in accordance with the applicable accounting and auditing laws, rules and regulations.

11.4 Unless otherwise provided in the **SCC**, all payments to the Supplier under this Contract shall be in Philippine Peso;

11.5 Unless otherwise provided in the **SCC**, payments using LoC is allowed. For this purpose, the amount of provisional sum shall be indicated in the **SCC**. All charges for the opening of the LoC and/or incidental expenses thereto shall be for the account of the Supplier.

13) Taxes and Duties

The Supplier, whether local or foreign, shall be entirely responsible for all the necessary taxes, stamp duties, license and permit fees, and other such levies imposed for the completion of this Contract.

14) Performance Security

13.1 Within ten (10) calendar days from receipt of the Notice of Award from the Procuring Entity, but in no case later than the signing of the contract by both parties, the successful Bidder shall furnish the performance security in any the forms prescribed in the ITB Clauses 31.2 and 31.3.

13.2 The performance security posted in favor of the Procuring Entity shall be forfeited in the event it is established that the winning Bidder is in default in any of its obligations under the contract.

13.3 The performance security shall remain valid until issuance by the Procuring Entity of the Certificate of Final Acceptance.

13.4 The performance security may be released by the Procuring Entity and returned to the Supplier after the issuance of the Certificate of Final Acceptance, subject to the following conditions:

a) There are no pending claims against the Supplier or the Surety Company filed by the Procuring Entity;

b) The Supplier has no pending claims for labor and materials filed against it; and

c) Other terms specified in the **SCC**.

13.5 The Procuring Entity shall allow a proportional reduction in the original performance security in case of a reduction in contract value, provided that any such reduction is more than ten percent (10%) and that the aggregate of such reductions is not more than fifty percent (50%) of the original performance security.

15) Use of Contract Documents and Information

14.1 The Supplier shall not, without the Procuring Entity's prior written consent, disclose this Contract or any specification, plan, drawing, pattern, sample, or information furnished by or on behalf of the Procuring Entity, except for purposes of performing the obligations therein. Any such disclosure shall be made in confidence and shall extend only as far as may be necessary for purposes of such performance.

14.2 Other than this Contract, any document enumerated in **GCC** Clause 14.1 shall remain the property of the Procuring Entity. All copies shall be returned to the Procuring Entity upon completion of the Supplier's performance under this Contract, if so required by the Procuring Entity.

16) Standards

The Goods provided under this Contract shall conform to the standards mentioned in the Section VII. Technical Specifications. When no applicable standard is mentioned, the Goods shall comply with the latest authoritative standards appropriate to its country of origin.

17) Inspection and Tests

16.1 The Procuring Entity or its representative shall have the right to inspect and/or to test the Goods to confirm their conformity to the Contract specifications at no extra cost to the Procuring Entity, other than that specified under Item 16.3 below. The **SCC** and Section VII. Technical Specifications shall specify what inspections and/or tests the Procuring Entity requires and where they are to be conducted. The Procuring Entity shall notify the Supplier in writing, in a timely manner, of the identity of any representatives retained for these purposes.

16.2 If applicable, the inspections and tests may be conducted on the premises of the Supplier or its subcontractor(s), at point of delivery, and/or at the goods' final destination. If conducted on the premises of the Supplier or its subcontractor(s), all reasonable facilities and assistance, including access to drawings and production data, shall be furnished to the inspectors at no cost to the Procuring Entity. The Supplier shall provide the Procuring Entity with the results of such inspections and tests.

16.3 The Procuring Entity or its designated representative shall be allowed to attend the tests and/or inspections referred to in this Clause provided that the Procuring Entity shall bear all of its own costs and expenses incurred in connection with such attendance including, but not limited to, all traveling and board and lodging expenses.

16.4 The Procuring Entity shall reject the Goods or any part thereof that fail any test and/or inspection or do not conform to the specifications. The Supplier shall either rectify or replace such rejected Goods or parts thereof or make alterations necessary to meet the specifications at no cost to the Procuring Entity. Upon giving due notice to the Supplier pursuant to **GCC** Clause 5, the test and/or inspection may be repeated by the Procuring Entity, at no additional cost.

16.5 The Supplier agrees that neither the execution of a test and/or inspection of the Goods or any part thereof, nor the attendance by the Procuring Entity

or its representative to the said test and/or inspection, shall release the Supplier from any warranties or other obligations under this Contract.

18) Warranty

17.1 The Supplier warrants that the Goods supplied under the Contract are new, unused, of the most recent or current models, and with all recent improvements in design and materials, except when the technical specifications required by the Procuring Entity provides otherwise.

17.2 The Supplier further warrants that all Goods supplied under this Contract shall have no defect, arising from design, materials, or workmanship or from any act or omission of the Supplier that may develop under normal use of the supplied Goods in the conditions prevailing in the country of final destination.

17.3 To ensure correction of manufacturing defects, the Supplier shall be required to provide a warranty for a minimum period specified in the **SCC**. At the option of the Procuring Entity, the obligation for the warranty shall be covered by:

a) Retention money in an amount equivalent to at least one percent (1%) but not to exceed five (5%) of every progress payment; or

b) Special bank guarantee equivalent to at least one percent (1%) but not to exceed five (5%) of the total Contract Price; or

c) Other such amount, if so specified in the **SCC**.

17.4 The said amounts shall only be released by the Procuring Entity after the lapse of the warranty period as specified in the **SCC**, or in case of Expendable Supplies, after the consumption thereof; Provided, however, that the Supplies delivered are free from patent and latent defects and all the conditions imposed under this Contract have been fully met.

17.5 The Procuring Entity shall promptly notify the Supplier in writing of any claims arising under the warranty. Upon receipt of such notice, the Supplier shall, within the period specified in the **SCC**, repair or replace the defective Goods or parts thereof, at the soonest possible time, without cost to the Procuring Entity.

17.6 If the Supplier, after having been notified on the warranty claim, fails to remedy the defect(s) within the period specified in **GCC** Clause 17.5, the Procuring Entity may proceed to take such remedial action as may be necessary, at the Supplier's risk and expense, and without prejudice to any other rights which the Procuring Entity may have against the Supplier under the Contract and other applicable laws.

19) Delays in the Supplier's Performance

18.1 Delivery of the Goods and/or performance of Services shall be made by the Supplier in accordance with the time schedule prescribed by the Procuring Entity in Section VI. Schedule of Requirements.

18.2 If at any time during the performance of this Contract, the Supplier encounters conditions that may impede the timely delivery of the Goods and/or performance of Services, the Supplier shall promptly notify the Procuring Entity in writing of the fact of the delay, its likely duration and its cause(s). As soon as practicable after receipt of the Supplier's notice, and upon causes provided for under **GCC** Clause 23, the Procuring Entity shall evaluate the situation and, if warranted, extend the Supplier's time for performance, in which case the extension shall be ratified by the parties by amendment of Contract.

18.3 Except as provided under **GCC** Clause 23, any delay by the Supplier in the performance of its obligations shall render it liable to the imposition of liquidated damages pursuant to **GCC** Clause 19, unless an extension of time is agreed upon pursuant to **GCC** Clause 28.

20) Liquidated Damages

19.1 When the Supplier fails to satisfactorily deliver the Goods under the contract within the specified delivery schedule, inclusive of duly granted time extensions, if any, the Supplier, manufacturer, or distributor shall be liable for liquidated damages in an amount equal to one-tenth (1/10) of one percent (1%) of the cost of the delayed goods scheduled for delivery for every day of delay until such goods are finally delivered and accepted by the Procuring Entity.

19.2 The Procuring Entity need not prove that it has incurred actual damages to be entitled to liquidated damages. Such amount shall be deducted from any money due, or which may become due the supplier, manufacturer, or distributor, or collected from any securities or warranties posted by the supplier, manufacturer, or distributor, whichever is convenient to the Procuring Entity. In case the total sum of liquidated damages reaches ten percent (10%) of the total contract price, the Procuring Entity may rescind the contract and impose appropriate sanctions over and above the liquidated damages to be paid.

19.3 If delays are likely to be incurred beyond its control, the supplier, manufacturer, or distributor shall promptly notify the Procuring Entity in writing, providing details of the causes and duration of the expected delay. The Procuring Entity may, at its discretion, grant a time extension based on meritorious grounds, with or without the imposition of liquidated damages.

21) Settlement of Disputes

20.1 Any dispute arising from the implementation of a contract covered by the Act and the IRR shall primarily be resolved and settled amicably by mutual consultation or agreement.

20.2 In case of failure to settle dispute amicably, the parties may mutually agree in writing to resort to other modes of alternative dispute resolution (ADR) to promote efficiency in the procurement process. Accordingly, they are encouraged to select the most expeditious mode of ADR available.

If arbitration is chosen as the ADR method, this shall be incorporated as a provision in the contract and referred to the Arbitrator specified in the **SCC.**

20.3 In case of disagreement or after exhausting the remedies provided in the preceding Section, the dispute may be submitted to arbitration or other forms of ADR which includes mediation, conciliation, early neutral evaluation, mini-trial, or any combination thereof in accordance with the provisions of RA No. 9285, otherwise known as the "Alternative Dispute Resolution Act of 2004."

20.4 Should the Parties fail to resolve their dispute or difference by such mutual consultation or agreement after thirty (30) days, either the Procuring Entity or the Supplier may signify its intention to commence arbitration by giving notice to the other Party, as hereinafter provided, as to the matter in dispute, and no arbitration in respect of this matter may be commenced unless such notice is given.

20.5 Any dispute or difference in respect of which a notice of intention to commence arbitration has been given in accordance with this Clause shall be settled by arbitration. Arbitration may be commenced prior to or after delivery of the Goods under this Contract.

20.6 Notwithstanding any reference to arbitration herein, the Parties shall continue to perform their respective obligations under the Contract unless otherwise agreed upon in writing.

22) Liability of the Supplier

21.1 The Supplier's liability under this Contract shall be as provided by the laws of the Republic of the Philippines, subject to additional provisions, if any, set forth in the **SCC**.

21.2 Except in cases of criminal negligence or willful misconduct, and in the case of infringement of patent rights, if applicable, the aggregate liability of the Supplier to the Procuring Entity shall not exceed the total Contract Price, provided that this limitation shall not apply to the cost of repair or replacement of the defective Goods.

23) Termination for Breach of Contract

The Procuring Entity may terminate for breach of contract when the Supplier fails to deliver or perform any or all of the Goods within the period(s) specified in the contract, or within any extension thereof granted by the Procuring Entity, pursuant to a request made by the Supplier prior to the delay, and such failure amounts to at least ten percent (10%) of the contract price, consistent with the provision of this IRR on liquidated damages. The Procuring Entity may likewise impose appropriate sanctions therein.

24) Termination Due to Force Majeure

23.1 For purposes of this Contract, the terms "*force majeure*" and "fortuitous event" may be used interchangeably. In this regard, a fortuitous event or *force majeure* shall be interpreted to mean as an event which the Supplier could not have been foreseen, or though foreseen, was inevitable. It shall not include ordinary unfavorable weather conditions, and any other causes

the effect/s of which could have been avoided with the exercise of reasonable diligence by the Supplier. Such events may include, but not limited to, acts of the Procuring Entity in its sovereign capacity, wars or revolutions, fires, floods, epidemics, quarantine restrictions, and freight embargoes.

23.2 The Procuring Entity may terminate this Contract and impose liquidated damages when, as a result of *force majeure*, the Supplier is unable to deliver or perform any or all of the Goods, amounting to at least ten percent (10%) of the Contract Price, for a period of not less than sixty (60) calendar days, or earlier, as deemed necessary by the Procuring Entity, after receipt of the written notice from the Procuring Entity stating that the circumstance of *force majeure* is deemed to have ceased.

23.3 The Supplier shall not be subject to forfeiture of its performance security, payment of liquidated damages, or contract termination due to *force majeure,* provided that the Supplier's delay in performance or other failure to perform its obligations under this Contract is the result of a *force majeure*.

23.4 If a *force majeure* situation arises, the Supplier shall promptly notify the Procuring Entity in writing of such condition and the cause thereof. Unless otherwise directed by the Procuring Entity, the Supplier shall continue to perform its obligations under the Contract as far as may be practicable, when not prevented by the *force majeure*, and shall seek all reasonable alternative means in the performance of its obligation.

25) Termination for Convenience

24.1 The Procuring Entity, through a written notice sent to the Supplier, may terminate this Contract, in whole or in part, at any time, if it has determined the existence of any of the following conditions that make contract implementation economically, financially, or technically impractical or unnecessary:

a) When physical and economic conditions have significantly changed so as to render the project no longer economically, financially, or technically feasible, as determined by the HoPE;

b) When the HoPE has determined the existence of conditions that make project implementation impractical or unnecessary, such as, but not limited to, fortuitous event/s, changes in laws, and government policies;

c) When funding for the Project has been withheld or reduced by higher authorities through no fault of the Procuring Entity; or

d) Any circumstance analogous to the foregoing.

24.2 The Goods that have been performed or are ready to be delivered or performed within thirty (30) calendar days after the Supplier's receipt of Notice to Terminate shall be accepted by the Procuring Entity at the

contract terms and prices thereof. For Goods not yet delivered, performed and/or ready to be delivered or performed, the Procuring Entity may elect:

a) To have any portion delivered and/or performed and paid at the contract terms and prices thereof; or

b) To cancel the remainder and pay to the Supplier an agreed amount for partially completed and/or performed goods and for materials and parts previously procured by the Supplier.

26) Termination for Unlawful Acts

25.1 The Procuring Entity may terminate this Contract in case it is determined *prima facie* that the Supplier, including any joint venture partner therein, has engaged, before or during the implementation of this Contract, in unlawful deeds and behaviors relative to contract acquisition and implementation. Unlawful acts include, but are not limited to, the following:

a) Corrupt, fraudulent, collusive, and coercive practices as defined in ITB Clause 3.1;

b) Drawing up or using forged documents;

c) Using adulterated materials, means or methods, or engaging in production contrary to rules of science or the trade; and

d) Any other act analogous to the foregoing.

27) Procedures for Termination of Contracts

26.1 The following provisions shall govern the procedures for termination of this Contract:

a) **Verification** - Upon receipt of a written report of acts or causes which may constitute grounds for termination as aforementioned, or upon its own initiative, the End-User or Implementing Unit shall, within a period of seven (7) calendar days, verify the existence of such grounds and cause the execution of a Verified Report, with all relevant evidence attached.

b) **Notice to Terminate** - Upon recommendation by the End-User or Implementing Unit, the HoPE shall terminate contracts only by written notice to the supplier conveying the termination of the contract. The notice shall state:

i) That the contract is being terminated for any of the grounds aforementioned, and a statement of the acts that constitute the grounds constituting the same;

ii) The extent of termination, whether in whole or in part;

iii) An instruction to the Supplier, to show cause as to why the contract should not be terminated; and

iv) Special instructions of the Procuring Entity, if any.

The Notice to Terminate shall be accompanied by a copy of the Verified Report.

c) **Show Cause** - Within a period of seven (7) calendar days from receipt of the Notice of Termination, the Supplier shall submit to the HoPE a verified position paper stating why the contract should not be terminated. If the Supplier, fails to show cause after the lapse of the seven (7) day period, either by inaction or by default, the HoPE shall issue an order terminating the contract.

d) **Rescission of Notice of Termination** - The Procuring Entity may, at any time before receipt of the Supplier's verified position paper, withdraw the Notice to Terminate if it is determined that certain items or works subject of the notice had been completed, delivered, or performed before the Supplier's receipt of the notice.

e) **Decision** - Within a non-extendible period of ten (10) calendar days from receipt of the verified position paper, the HoPE shall decide whether or not to terminate the contract. It shall serve a a written notice to the Supplier of its decision and, unless otherwise provided, the contract is deemed terminated from receipt of the Supplier of the notice of the decision. The termination shall only be based on the grounds stated in the Notice to Terminate.

f) **Contract Termination Review Committee (CTRC)** - The HoPE may create a committee to assist in the discharge of its functions under the IRR. All decisions recommended by the CTRC shall be subject to the approval of the HoPE.

g) **Take-over of Contracts -** If a Procuring Entity terminates the contract due to default, insolvency, or for a cause, it may enter into a Negotiated Procurement (Take-over of Contracts) pursuant to Section 35(c) of RA No. 12009.

h) **Procuring Entity's Options in Termination for Convenience in Contracts for Goods** - The Goods that have been performed or are ready for delivery within thirty (30) calendar days after the supplier's receipt of Notice to Terminate shall be accepted by the Procuring Entity at the contract terms and prices. For Goods not yet performed or ready for delivery, the Procuring Entity may elect:

i) To have any portion delivered or performed and paid at the contract terms and prices; or

ii) To cancel the remainder and pay to the supplier an agreed amount for partially completed or performed goods and for materials and parts previously procured by the supplier.

28) Assignment of Rights

The Supplier shall not assign its rights or obligations under this Contract, in whole or in part, except upon prior written consent of the Procuring Entity.

29) Amendment to Order

No variation in or modification of the terms of this Contract shall be made except by written amendment signed by the parties in accordance with the provisions on Amendment to Order, subject to applicable laws, rules and regulations.

30) Application

These General Conditions shall apply to the extent that they are not suspended by the provisions from other parts of this Contract.

Section V. Special Conditions of Contract

The provisions of this Section complement the GCC, specifying contractual requirements linked to the special circumstances of the Procuring Entity, the Procuring Entity's country, the sector, and the Goods purchased. In preparing this Section, the following aspects should be checked:

a) Information that complements provisions of Section IV must be incorporated.

b) Amendments and/or supplements to provisions of Section IV, as necessitated by the circumstances of the specific purchase, must also be incorporated.

Special Conditions of Contract

GCC Clause	
1(a)	The Procuring Entity is **DOE.**
1(b)	The Supplier is **as indicated in the Notice to Proceed.**
1(c)	The Funding Source is: 2.1 The GoP through the source of funding as indicated below for **CY2026** in the amount of **Php513,500,000.00.** 2.2 The source of funding is: **a) NEP, the National Expenditure Program.**
1(d)	The Project Site is at **DOE Main Office, Energy Center, Rizal Drive cor. 34th Street, Bonifacio Global City, Taguig City**
2	No further instructions.
5.1	The Procuring Entity's address for Notices is: **DOE Annex Building, Energy Center, Rizal Drive cor. 34th Street, Bonifacio Global City, Taguig City** The Supplier's address for Notices is: **As indicated in the Submitted Bidding Documents**
5.2	No further instructions.
6.2	**Delivery and Documents** For purposes of this Contract, "EXW," "FOB," "FCA," "CIF," "CIP," "DDP" and other trade terms used to describe the obligations of the parties shall have the meanings assigned to them by the current edition of INCOTERMS published by the International Chamber of Commerce, Paris. The Delivery terms of this Contract shall be as follows: *For Goods Supplied from Abroad, state "*The delivery terms applicable to the Contract are DDP delivered *[insert place of destination].* In accordance with INCOTERMS." (DAP) *For Goods Supplied from Within the Philippines, state "*The delivery terms applicable to this Contract are delivered *[insert place of destination].* Risk and title will pass from the Supplier to the Procuring Entity upon receipt and final acceptance of the Goods at their final destination." Delivery of the Goods shall be made by the Supplier in accordance with the terms specified in Section VI. Schedule of Requirements. The details of shipping and/or other documents to be furnished by the Supplier are as follows:

	For Goods supplied from within the Philippines: Upon delivery of the Goods to the Project Site, the Supplier shall notify the Procuring Entity and present the following original documents to the Procuring Entity: i) Supplier's invoice showing the goods' description, quantity, unit price, and total amount; ii) Delivery receipt/note, railway receipt, or truck receipt; iii) Supplier's factory inspection report; iv) Manufacturer's and/or Supplier's warranty certificate; v) Certificate of origin (for imported Goods); vi) Delivery receipt detailing number and description of items received signed by the authorized receiving personnel; vii) Certificate of Acceptance/Inspection Report signed by the Procuring Entity's representative at the Project Site; and viii) Four copies of the Invoice Receipt for Property signed by the Procuring Entity's representative at the Project Site. *For goods supplied from abroad:* Upon shipment, the Supplier shall immediately communicate and notify the Procuring Entity and the insurance company the full details of the shipment, including Contract Number, description of the goods, quantity, vessel, bill of lading number and date, port of loading, date of shipment, port of discharge etc. Upon delivery to the Project Site, the Supplier shall notify the Procuring Entity and present the following original documents as applicable with the documentary requirements of any letter of credit issued taking precedence: i) Supplier's invoice showing the goods' description, quantity, unit price, and total amount; ii) Negotiable, clean shipped on board bill of lading marked "freight prepaid", as well as a copy of the non-negotiable bill of lading; iii) Supplier's factory inspection report; iv) Manufacturer's and/or Supplier's warranty certificate; v) Certificate of origin (for imported goods); vi) Delivery receipt detailing number and description of items received signed by the Procuring Entity's representative at the Project Site; vii) Certificate of Acceptance/Inspection Report signed by the Procuring Entity's representative at the Project Site; and viii) Invoice Receipt for Property signed by the Procuring Entity's representative at the Project Site.

	For purposes of this Clause the Procuring Entity's Representative at the Project Site is **Ms. Luningning G. Baltazar (Director IV, EPIMB).** **Incidental Services** The Supplier is required to provide all of the following services, including additional services, if any, specified in Section VI. Schedule of Requirements: ***any of the requirements:*** a) performance or supervision of onsite assembly and/or startup of the supplied goods; b) furnishing of tools required for assembly and/or maintenance of the supplied goods; c) furnishing of a detailed operations and maintenance manual for each appropriate unit of the supplied goods; d) performance or supervision or maintenance and/or repair of the supplied goods, for a period of time agreed by the parties, provided that this service shall not relieve the Supplier of any warranty obligations under this Contract; and e) training of the Procuring Entity's personnel, at the Supplier's plant and/or on-site, in assembly, start-up, operation, maintenance, and/or repair of the supplied goods. The Contract price for the goods shall include the prices charged by the Supplier for incidental services and shall not exceed the prevailing rates charged to other parties by the Supplier for similar services. **Packaging** The Supplier shall meet packaging standards for goods in accordance with existing laws and regulations, and as indicated in this Contract to prevent damage or deterioration during transit to their final destination. The packaging shall be durable enough to withstand rough handling, exposure to extreme temperatures, salt, precipitation, open storage, and other extreme conditions during transit. Packaging case sizes and weights shall consider the remoteness of the goods' final destination and the potential absence of heavy handling facilities at all transit points. The packaging, labeling, and documentation within and outside the packages shall comply strictly with special requirements as shall be expressly provided for in this Contract, including additional requirements, specified below, and in any subsequent instructions ordered by the Procuring Entity. The outer packaging must be clearly marked on at least four (4) sides as follows:

	Name of the Procuring Entity Name of the Supplier Contract Description Final Destination Gross weight Any special lifting instructions Any special handling instructions Any relevant Hazardous Chemical classifications A packaging list identifying the contents and quantities of the package is to be placed on an accessible point of the outer packaging, if practical. Otherwise, the packaging list is to be placed outside the secondary packaging. **Insurance** The Supplier shall fully insure the goods supplied under this Contract in a currency, local or tradeable and accepted by the *Bangko Sentral ng Pilipinas* against loss or damage incidental to manufacture, acquisition, transportation, storage, and delivery. The risk and ownership of the goods remain with the Supplier until their final acceptance by the Procuring Entity, unless otherwise specified in this Contract. **Transportation** The Supplier shall arrange and pay for the delivery of the goods, with the cost included in the Contract Price. When required under this Contract to deliver the goods CIF, CIP, or DDP, the Supplier shall ensure the transport of the goods to the port of destination or any other specified place of destination in the Philippines, as indicated in this Contract. The Supplier shall arrange for transport, insurance, and storage to the specified destination with the related costs included in the Contract Price. When required under this Contract to transport the goods to a specified place of destination within the Philippines, defined as the Project Site. The goods must be transported using carriers registered in the Philippines when the Supplier is required under this Contract to deliver the goods CIF (Cost, Insurance, and Freight), CIP (Carriage and Insurance Paid To), or DDP (Delivered Duty Paid). If no Philippine-registered carrier is available, the goods may be shipped using a non-Philippine carrier, provided the Supplier obtains and presents certification from the nearest Philippine consulate at the port of dispatch. If Philippine-registered carriers are available but their schedules would impede timely delivery or cause delays in the Supplier's performance of this Contract, the period of delay from when

	the goods were first ready for shipment to the actual date of shipment will be considered *force majeure* in accordance with **GCC** Clause 23. The Procuring Entity accepts no liability for the damage of goods during transit other than those prescribed by INCOTERMS for DDP Deliveries. In the case of goods supplied from within the Philippines or supplied by domestic Suppliers, risk and ownership will not be deemed transferred to the Procuring Entity until their receipt and final acceptance at the final destination. **Patent Rights** The Supplier shall indemnify the Procuring Entity against all third-party claims of infringement of patent, trademark, or industrial design rights arising from use of the goods or any part thereof.
10.3	The terms of payment shall be as follows: **-stated in the TOR.**
11.4	Payment shall be made in **Philippine Peso.**
11.5	Payment using LoC is not allowed
13.4(c)	**Release of Performance Security will be made upon request of the Supplier with all the supporting documents required under the government budgeting, accounting and auditing rules.**
16.1	The inspections and tests that will be conducted are: **As required under the TOR.**
17.3	*If the goods pertain to Expendable Supplies:* Three (3) months after acceptance by the Procuring Entity of the delivered goods or after the goods are consumed, whichever is earlier. *If the goods pertain to Non-expendable Supplies:* One (1) year after acceptance by the Procuring Entity of the delivered goods. The period for correction of defects in the warranty period is: ***as stated in the Terms of Reference (TOR).***
17.3	**Not Applicable.**
17.4	**Not Applicable.**
17.5	No further instructions.
20.2	Not applicable
21.1	No further instructions.

Section VI. Schedule of Requirements

Lot No.	Description	Quantity	Total Cost (Php)	Delivery Schedule
1	MES integrated in vehicle5	8	80,000,000.00	One Hundred Twenty (120) calendar days upon receipt of Notice to Proceed (NTP).
2	MES (towable) for disaster response	14	116,200,000.00	
3	MES (towable) for electrification, including Specialized Outlet (DLE-compatible)	19	174,800,000.00	
4	MES (towable) with hybrid controller with NPC SPUG Existing Generator	15	142,500,000.00	

Section VII. Technical Specifications

Reference to brand name shall not be allowed except for reasons of technical compatibility, interoperability, servicing, maintenance, or preservation of supplier warranty in order to keep the performance, functionality, and useful life of the equipment, in which case, the Procuring Entity shall indicate the reasons or justifications for availing of the exception as part of the Technical Specifications, Scope of Work, or Terms of Reference, as the case may be.

Where appropriate, drawings, including site plans as required, may be furnished by the Procuring Entity with the Bidding Documents. Similarly, the Supplier may be requested to provide drawings or samples either with its Bid or for prior review by the Procuring Entity during contract execution.

Bidders are also required, as part of the Technical Specifications, to complete their statement of compliance demonstrating how the items comply with the specification.

TERMS OF REFERENCE/ SPECIFICATION

Bidder's Statement of Compliance

Supply, Delivery, Installation, Testing and Commissioning of Mobile Energy System (MES)
ABC: Php513,500,000.00

Lot No.	Description	Unit Cost	No. of MES	Total Cost (Php)
1	MES integrated in vehicle	10,000,000	8	80,000,000.00
2	MES (towable) for disaster response	8,300,000	14	116,200,000.00
3	MES (towable) for electrification, including Specialized Outlet (DLE-compatible)	9,200,000	19	174,800,000.00
4	MES (towable) with hybrid controller with NPC SPUG Existing Generator	9,500,000	15	142,500,000.00
Total			**56**	**513,500,000.00**

I. BACKGROUND

The DOE, through EPIMB, is pursuing initiatives to support the electrification of unserved and underserved areas, including geographically isolated and disadvantaged areas (GIDAS), in line with national energy access and resilience objectives.

In support of these initiatives, the DOE intends to procure a Mobile Energy System (MES) that can provide reliable, portable, and immediate power supply for off-grid communities, emergency response operations, and other energy security applications.

The MES is envisioned as a containerized or transportable power solution integrating renewable energy sources, battery energy storage, and power conversion systems. It shall be designed for rapid deployment, ease of operation, and adaptability to varying field conditions.

II. OBJECTIVES

The project aims to:

a. Provide a reliable portable power supply system for off-grid and emergency applications;

b. Support the electrification of unserved and underserved areas; and

c. Enhance the government's disaster response and energy resiliency capabilities.

III. GENERAL PROVISION (Applicable to ALL LOTS)

The Mobile Energy System (MES) is a modular, hybrid renewable energy system composed of Solar PV, Battery Energy Storage System (BESS), Power Conversion System, Balance of System (BOS), and auxiliary components designed for off-grid and emergency deployment.

All MES units shall be:

a. Brand new and production-ready

b. Designed for tropical, coastal, and disaster-prone environments

c. Fully compliant with IEC standards and Philippine Electrical Code (PEC)

d. Capable of standalone and modular operation

IV. SCOPE OF WORK

The Supplier shall be responsible for the complete supply delivery, installation, testing, and commissioning of the MES and its components, and shall warrant its operability, in accordance with the requirements specified in this TOR.

1. System Design and Engineering

The Supplier shall be responsible to undertake the preparation of the detailed system design and engineering, including the configuration and integration of all components and synchronization with the distribution network, if purported for Lot 3 under this TOR, ensuring compliance with the minimum technical requirements and optimization of system performance, safety, and reliability.

2. Supply and Deliver Equipment

The Supplier shall supply and deliver all necessary equipment and components, including but not limited to the solar photovoltaic (PV) modules, battery energy storage systems (BESS), inverter and power conversion systems, balance of system (BOS) components, mounting structures, wiring, protection devices, and other materials required for the complete system. Delivery shall be made to the designated site(s) in accordance with the approved schedules.

V. MAJOR TECHNICAL COMPONENT OF MES (Common Baseline)

<table>
<tr><th></th><th>MES Components</th><th>Technical Specifications</th></tr>
<tr><td>1.0</td><td>Solar PV</td><td>The Solar Photovoltaic (PV) Generation System is the primary energy source of the Mobile Energy System (MES). It converts solar energy into direct current (DC) electricity to supply daytime loads and to charge the Battery Energy Storage System (BESS). The PV system is designed for rapid deployment and reliable operation under Philippine climatic conditions, including high temperature, humidity, and coastal environments. It enables fuel-free power generation during emergencies and reduces dependence on conventional generators.

The PV modules shall be suitable for outdoor deployment and compliant with applicable IEC standards for environmental protection, durability, and weather resistance. The module junction box shall have a minimum ingress protection rating of IP67. The overall PV module assembly shall be designed for long-term outdoor operation under tropical, coastal, and disaster-response conditions.

a. General Requirements:

<table>
<tr><td>Technology:</td><td>Monocrystalline silicon solar PV modules</td></tr>
<tr><td>Application:</td><td>Suitable for mobile energy system (MES) deployment under tropical and coastal Philippine conditions</td></tr>
<tr><td>Compliance:</td><td>Modules shall be brand new, unused, and of current production model</td></tr>
<tr><td>Waterproof and Weatherproof</td><td>IP67 or higher, rigid and durable enough for permanent outdoor placement - no daily set up required.</td></tr>
<tr><td>Design: Conventional or Retractable</td><td>The system allows for rapid installation, dismantling, and relocation, consistent with the functional requirements of a MES.

The system shall employ a Zero-Swing (Vertical)</td></tr>
</table>
</td></tr>
</table>

	Deployment mechanism designed to minimize the required deployment footprint, making it suitable for installation in remote and off-grid communities where available space and site accessibility may be limited. The bidder shall declare the required deployment footprint in its bid submission, which shall form part of the technical specifications, and shall demonstrate compliance with the declared footprint during testing.
Self Supporting	The panels are mounted on an integrated support frame that allows deployment and storage without reliance on existing buildings, roofs, or permanent civil structures.
Compatibility	Electrical characteristics shall be fully compatible with the system's MPPT charge controller and capable of operating in parallel with conventional rigid PV panels.

b. Electrical Specifications (minimum):

Solar Capacity	8kW
Rated Maximum Power	≥ 400 Wp per module (400-720Wp)
Power Tolerance:	0 to +5 Wp (positive tolerance only)
Module Efficiency	≥ 20%
Maximum Power Voltage (Vmp)	As specified by the manufacturer
Maximum Power Current (Imp)	As specified by the manufacturer
Open Circuit	As specified by the

Voltage (Voc):	manufacturer
Short Circuit Current (Isc):	as specified by the manufacturer and compatible with the inverter/MPPT input current rating.
Electrical Rating Conditions	All electrical parameters shall be measured under Standard Test Conditions (STC).

c. Environmental and Operating consideration

Operating Temperature Range:	–40 °C to +85 °C
Nominal Operating Cell Temperature (NOCT):	≤ 45 °C
Resistance to Ammonia and Salt Mist:	Required for coastal and island deployment

d. Degradation and Performance Warranty

First Year Degradation:	≤ 2%
Annual Degradation Thereafter:	≤ 0.55% per year
Performance Warranty:	Minimum 20 years, with not less than 80 4% of rated power at Year 25

e. Certifications and Standards (Mandatory IEC Compliance) The solar PV modules shall be fully compliant with the following international standards:

IEC 61215	Crystalline silicon terrestrial photovoltaic (PV) modules – Design qualification and type approval

IEC 61730-1 & IEC 61730-2	PV module safety qualification (construction and testing)
IEC 61701	Salt mist corrosion testing (required for coastal/island areas)
IEC 62716	Ammonia corrosion resistance
ISO 9001	Quality Management System (Manufacturer)

Test certificates shall be issued by IEC-accredited testing laboratories and ISO Certifications must be **submitted with the Bid**. During post-qualification, the Procuring Entity shall only validate the authenticity, validity, completeness, and conformity of the submitted documents, including the original documents where required under applicable procurement rules.

f. Solar PV Deployment

The Solar PV system shall be designed for zero- or minimal-shading ("zero-swing") vertical deployment, as applicable to the proposed MES configuration, and shall be suitable for deployment in the identified deployment areas.

No uniform fixed footprint shall be prescribed. However, the Bidder shall declare in its Bid the maximum ground/roof area and overall dimensions required for the Solar PV deployment, based on the capacity of the Solar PV configuration and module specifications. The declared footprint shall consider the actual site conditions and shall be sufficient to accommodate the required PV capacity, structural support, access and maintenance clearances, safety requirements, and applicable installation standards.

The proposed deployment footprint shall be optimized to minimize land/space requirements without compromising system performance, safety, accessibility, and maintainability. The Bidder shall demonstrate during inspection, testing, or acceptance testing that the installed Solar PV system conforms to the declared footprint and the required minimum Solar PV capacity.

g. PV Panel Protective Cover

The MES shall include protective covers or equivalent protective measures for the solar PV panels to minimize damage during transport, storage, standby deployment, and extreme weather conditions, particularly when pre-deployed in schools, barangay halls, evacuation centers, relocation sites, or similar public facilities.

		The protective cover shall: 1. Be durable, waterproof, UV-resistant, and suitable for outdoor use 2. Protect the PV panels from debris, dust, impact, and adverse weather conditions; 3. Be easy to install and remove during deployment or emergency operation; and 4. Not causing damage, overheating, or excessive pressure on the PV modules during storage or transport. The protective covers shall form part of the complete MES package at no additional cost to the Procuring Entity		
2.0	**Battery Energy Storage System (BESS)**	The Battery Energy Storage System (BESS) stores electrical energy generated by the solar PV system for use during nighttime, cloudy conditions, or when solar generation is unavailable. It provides the MES with the capability to deliver continuous power during disasters and ensures a minimum of two (2) days autonomy for evacuation center operations in the scenario that the daily energy consumption does not exceed 13 kWh/day. The BESS incorporates lithium-ion battery technology with an integrated Battery Management System (BMS) to ensure safe, reliable, and efficient charging, discharging, and monitoring. **a. General Requirements** Battery Technology: — Lithium-ion, with Lithium Iron Phosphate (LFP) chemistry preferred for safety and thermal stability Application: — The battery system shall be suitable for MES deployment for disaster response and evacuation center use. Condition: — Brand new, unused, and of current production model Configuration — Modular and scalable battery system		

b. Electrical Specifications

Nominal Energy Capacity per Module:	≥ 3.6 kWh
Total Installed Battery Capacity:	≥ 28.8 kWh (nominal)
Usable Energy Capacity:	≥ 26 kWh
Depth of Discharge (DoD):	90%
Nominal DC Voltage:	(48 V or equivalent preferred)
Round-Trip Efficiency:	≥ 90%
Maximum Continuous Charge/Discharge Rate	≥ 0.5C

c. Performance and Durability

Cycle Life:	≥ 6,000 cycles at 80% DoD
Calendar Life:	≥ 10 years
Capacity Retention:	≥ 70% at end of warranty period
Self-Discharge Rate:	≤ 3% per month

d. Battery Management System (BMS): Each battery module shall be equipped with an integrated Battery Management System capable of:

- Cell voltage monitoring and balancing
- Over-charge protection
- Over-discharge protection
- Over-current and short-circuit protection
- Over-temperature and under-temperature protection
- State of Charge (SOC) and State of Health (SOH) monitoring
- Alarm and fault signaling

e. Mechanical and Environmental Specifications

Enclosure Rating:	IP65 or higher
Operating Temperature Range:	
Charge:	0 °C to +55 °C
Discharge:	–20 °C to +60 °C
Cooling:	Natural convection or forced air cooling
Vibration and Shock	Suitable for transport

Resistance:	and mobile deployment
Fire Safety:	Integrated fire-retardant materials and thermal runaway mitigation features

f. Safety and Protection

1. Protection Against:
- Over-voltage and under-voltage
- Over-current and short circuit
- Reverse polarity
- Thermal runaway

2. Emergency disconnect and isolation capability shall be provided

g. Battery Mounting and Transportation Stability

The BESS, including battery modules, racks, and associated components, shall be securely mounted and mechanically restrained within the MES to prevent movement, displacement, vibration-induced damage, or loosening during transport, towing, deployment, and operation.

Where electric vehicle (EV)-type or EV-derived battery modules are utilized, the Supplier shall demonstrate through manufacturer documentation, certifications, or test reports that the battery system is suitable for mobile or transportable energy storage applications and is designed to withstand vibration, shock, and transportation-related stresses while maintaining safe and reliable operation.

h. Certification and Standards

IEC 62619	Safety requirements for secondary lithium cells and batteries for industrial applications
IEC 63056	Safety requirements for secondary lithium batteries for energy storage systems
IEC 62477-1	Safety requirements for power electronic converter systems
UN 38.3	Transport safety testing for lithium batteries
ISO 9001	Quality Management System (Manufacturer)

Test certificates shall be issued by IEC-accredited testing laboratories and ISO Certifications must be **submitted with the Bid**. During post-qualification, the Procuring Entity shall only validate the authenticity, validity, completeness, and conformity

		of the submitted documents, including the original documents where required under applicable procurement rules. For purposes of the Bidder's compliance with inverter and power conversion system safety requirements, the following shall apply: (1) Systems with Separate Battery Inverter / Power Conversion System (PCS) Where the Battery Energy Storage System (BESS) employs a dedicated and standalone battery inverter or bidirectional power conversion system (PCS) separate from the photovoltaic (PV) inverter, the said battery inverter/PCS shall comply with: IEC62477-1 This requirement shall apply to all standalone converters performing battery charge and discharge functions independent of PV inverter operation. (2) Systems Utilizing Hybrid Inverter (Integrated PV + BESS Functionality) Where the system employs a hybrid inverter integrating both photovoltaic (PV) grid-tied conversion and battery charging/discharging functions within a single unit, a separate compliance with IEC 62477-1 for a battery inverter/PCS shall no longer be required. Instead, the hybrid inverter shall comply with: The applicability of the above standards shall be determined based on the system architecture submitted **by the Bidder with its Bid.** During post-qualification, the Procuring Entity shall validate the submitted system architecture and the corresponding compliance documents. **i. Integration and Compatibility** • Battery system shall be fully compatible with the specified inverter and charge controller • Communication Protocol: CAN, RS485, or equivalent • Parallel operation of battery modules shall be supported **j. Warranty Requirements** Product Warranty: Minimum 5 years Performance Warranty: Minimum 10 years or ≥ 6,000 cycles, whichever comes first		
3. 0	**INVERTER/ POWER CONVERSION SYSTEM**	The Inverter or Power Conversion System converts DC electricity from the PV array and batteries into usable alternating current (AC) power for the evacuation center and household-equivalent loads. It manages power flow among the PV system, battery		

storage, and connected loads while maintaining stable voltage and frequency. The inverter also provides system protection, supports load surges from essential equipment, and enables off-grid operation suitable for mobile and emergency energy applications.

Type:	Hybrid Inverter compatible with BESS
Rated Capacity:	Minimum 8 kW
Output Voltage:	230 V AC, single-phase
Frequency:	60 Hz
Surge Capacity:	≥ 150% of rated power
Conversion Efficiency:	≥ 95%
Protection Features:	Overload Over/Under-voltage Short-circuit Anti-islanding
Compliance:	IEC 62109 PEC-compliant

4.0 **BALANCE OF SYSTEM (BOS)**

The Balance of System (BOS) includes all auxiliary electrical and structural components necessary for the safe and reliable operation of the MES. These components consist of DC combiner boxes, AC distribution panels, protective devices, cabling, grounding and earthing systems, mounting structures, and electrical enclosures. The BOS ensures proper power distribution, electrical protection, and compliance with the Philippine Electrical Code (PEC) and applicable safety standards.

- DC Combiner Box with fuses and DC surge protection
  - The DC combiner box requirement shall refer to the DC connection, isolation, and protection system between the PV modules and the inverter/charge controller. Separate DC combiner boxes shall not be mandatory where the proposed PV string configuration allows direct connection to the inverter, provided that adequate DC protection, isolation, surge protection, and operational safety are maintained in accordance with applicable IEC standards and good engineering practice.

		• AC Distribution Panel with circuit breakers - the AC Distribution System refers specifically to the AC-side power distribution, protection, feeder management, and load connection components of the MES, while the Balance of System (BOS) refers to the auxiliary and supporting electrical, mechanical, structural, grounding, monitoring, wiring, and integration components necessary for the complete installation, operation, protection, and interoperability of the MES. Any overlap in component interfaces shall not be interpreted as duplication of functional requirements. • Load prioritization for critical and non-critical loads • Grounding and Earthing System compliant with the Philippine Electrical Code (PEC) • Cabling: UV-resistant, properly sized DC and AC cables • Monitoring System: ◦ PV generation ◦ Battery State of Charge (SOC) ◦ Load consumption		
5.0	**AUTONOMY AND PERFORMANCE REQUIREMENTS**	The MES shall be designed to provide a minimum of two (2) days of operational autonomy (if the daily energy consumption does not exceed 13 kWh/day), defined as the ability of the system to continuously supply electrical power to designated critical loads without any solar generation or external power source. Autonomy shall be achieved through the Battery Energy Storage System (BESS) alone and shall be based on the defined daily energy demand of the evacuation center, equivalent to 13 kWh/day, under disaster or emergency operating conditions. The required autonomy ensures that essential services—such as lighting, ventilation, communication equipment, charging facilities, and basic administrative and medical support—remain operational during extended periods of adverse weather, nighttime operation, or prolonged grid outages commonly experienced during calamities. For compliance purposes: • The MES shall provide at least 26 kWh of usable battery energy to meet the two-day autonomy requirement. • The system shall be capable of sustaining operations for 48 consecutive hours without solar input, provided that daily energy consumption does not exceed the specified design load.		

		• Autonomy shall be verified through system sizing calculations and demonstrated during testing and commissioning, as required by the Procuring Entity. Where additional medical or safety loads are connected, resulting in increased daily energy demand, the system shall remain operable with reduced autonomy unless additional battery capacity is provided. Solar PV generation shall be utilized to extend system autonomy and support continuous operation beyond the minimum required period. The system shall sustain two (2) days of autonomous operation, provided daily energy consumption does not exceed 10-13 kWh/day.		
6.0	**AC DISTRIBUTION SYSTEM**	The AC Distribution System of the MES shall safely distribute alternating current (AC) power from the inverter to various loads, including lighting, charging stations, communication equipment, and other essential appliances during emergency and disaster response operations. The system shall be designed for safe, reliable, and flexible power delivery, allowing simultaneous connection of multiple loads while ensuring protection against overloads, short circuits, and electrical faults. **a. System Configuration** • The AC distribution system shall be supplied from the single-phase AC output of the inverter. • Nominal system voltage: 230 V AC, single-phase, 60 Hz. • Distribution shall be centralized through an AC Distribution Panel (ACDB) housed within or integrated into the MES enclosure. **b. AC Distribution Panel (ACDB)** • To be constructed of metal or non-combustible enclosure with adequate ventilation • Have minimum ingress protection of IP54 or higher • Be equipped with lockable access door • Be clearly labeled for all circuits and protective devices • Be designed for portable and mobile operation **c. Circuit Protection Devices** The AC distribution system shall include the following minimum protective devices: • Main AC Circuit Breaker ◦ Rated to match inverter output capacity ◦ Provides isolation and overcurrent protection for the entire AC system		

- Miniature Circuit Breakers (MCBs)
  - Individual MCBs for each outgoing circuit
  - Rated according to load type and conductor size
  - IEC 60898-1 compliant or equivalent

- Residual Current Device (RCD) / Earth Leakage Circuit Breaker
  - Sensitivity: 30 mA for personnel protection
  - Installed at the main or branch circuit level
  - IEC 61008 / IEC 61009 compliant or equivalent

d. Load Segregation Priority

The AC distribution system shall provide separate circuits for the following load categories:

- Critical Loads (e.g., emergency lighting, medical refrigerator, communications)
- General Loads (e.g., fans, convenience outlets)
- Charging Stations (mobile phones, power banks, small devices)

Critical load circuits shall be clearly identified and protected to ensure continuity of operation during load management or system constraints.

e. AC Outlets and Interferences

Standard 230 V AC convenience outlets, heavy-duty type

- Minimum rating: 10 A per outlet, unless otherwise specified
- Outlets shall be industrial or weather-resistant type suitable for outdoor use
- Location shall allow safe access under the awning or enclosure
- All outlets shall be properly grounded

f. Grounding and Earthing

The MES shall be equipped with an adequate grounding and earthing system to ensure safe and reliable operation. All electrical components, enclosures, and conductive parts shall be properly grounded in accordance with applicable standards and codes. The grounding system shall be suitable for mobile or temporary deployment conditions and shall provide protection against electrical faults and hazards.

The MES shall include grounding terminals, bonding points, and connection interfaces for grounding electrodes and lightning protection systems compliant with IEC and PEC standards. Final grounding electrode configuration, including grounding flat bars, rods, conductors, or equivalent grounding materials, may vary depending on site-specific soil conditions, grounding resistance requirements,

		corrosion considerations, and detailed engineering design. Bidders shall ensure that the proposed grounding system is capable of achieving safe and compliant grounding performance under actual deployment conditions. **g. Wiring and Cabling** • AC wiring shall use copper conductors, insulated and rated for 600 V minimum • Cables shall be sized according to load and voltage drop requirements • Wiring shall be neatly routed, secured, and protected from mechanical damage • Color coding and labeling shall follow applicable electrical standards **h. Safety Operational Features** • Emergency AC isolation switch for quick shutdown • Clear safety signage and warnings • Overload and short-circuit protection coordinated with inverter ratings • No exposed live parts during normal operation **i. Documentation and Compliance** The bidder shall submit: • Single-line diagram (SLD) of the AC distribution system • Manufacturer's brochures or technical datasheets of the proposed ACDB and protective devices, submitted with the Bid. • Test and commissioning reports, such as but not limited to Factory Acceptance Test Reports, vibration/mechanical stress test reports, PEE Certification for safety either for “stand-alone” or “grid interconnection” • Compliance with: ◦ IEC standards ◦ Philippine Electrical Code (PEC) (i.e, Statement of Compliance) ◦ Applicable DOE safety requirements Test certificates shall be issued by IEC-accredited testing laboratories and ISO Certifications must be **submitted with the Bid**. During post-qualification, the Procuring Entity shall only validate the authenticity, validity, completeness, and conformity of the submitted documents, including the original documents where required under applicable procurement rules.		
7.0	**MES ENCLOSURE WITH INTEGRATED AWNING SYSTEM**	**a. General Description** The MES shall be housed in a weather-resistant enclosure equipped with an integrated, deployable awning system with detachable side walls, intended to provide protected working		

		space, equipment shelter, and temporary service areas during emergency, disaster response, and off-grid deployment. The enclosure and awning system shall enable rapid deployment, safe operation, and continuous access to MES components while ensuring protection from rain, direct sunlight, wind, and airborne debris. The specified wind resistance requirements shall be interpreted together with the structural and transport design requirements of the MES. The ability of the system to withstand the required wind conditions depends on the overall engineering design, including structural reinforcement, stabilizers, anchoring provisions, locking mechanisms, trailer configuration, and total system weight. Accordingly, the allowable MES weight is intended to provide sufficient flexibility for bidders to incorporate the necessary structural supports and reinforcements required to comply with the specified wind resistance, transportability, towing, and operational safety requirements. Bidders shall ensure that the MES remains structurally stable and safely towable by commonly available light vehicles, pickup trucks, and SUVs under intended deployment and transport conditions. **b. Enclosure Requirements** The MES enclosure shall: • Be constructed from durable, corrosion-resistant materials (e.g., powder-coated aluminum, marine-grade steel, or equivalent) • Be suitable for outdoor, all-weather operation under Philippine climatic conditions • Provide secure housing for batteries, inverter, control panels, and electrical components • Include lockable access doors with weather seals • Provide natural and/or forced ventilation to prevent heat buildup while maintaining ingress protection • Be compatible with mobile platforms (trailer-mounted, skid-mounted, or vehicle-mounted) • The total MES weight, including enclosure, awning, PV modules, BESS, mounting structures, trailer interface components, and all accessories, shall be a minimum of **1 ton and may extend up to 1.5 tons,** subject to the bidder's final engineering design, provided that the MES remains safely towable and transportable using commonly available light vehicles, pickup trucks, and SUVs, and compliant with applicable towing capacity, axle load, road transport, structural integrity, wind resistance, and operational safety requirements.		

c. Minimum enclosure protection:

- Ingress Protection: IP54 or higher
- Wind resistance: Suitable for temporary deployment during adverse weather (deployable and functional up to 60-80 kph [Signal No. 1 or 2], and the system, even if folded, must withstand wind speeds of at least 250 kph [Signal No. 4 or 5 levels] without structural failure)
- Operating temperature: At least 0°C to 50°C ambient

d. Integrated Awning System Requirements

The MES shall include a wrap-around or wide-coverage deployable awning system, functionally equivalent to a 270-degree awning, providing shaded and rain-protected space around the enclosure.

The awning system shall:

- Deploy from the MES enclosure or mobile frame
- Provide minimum 270-degree coverage around the unit, or equivalent total covered area
- Be operable by one (1) to two (2) personnel
- Require no specialized tools for deployment
- Be stable under moderate wind conditions (Beaufort Force 5 at the maximum) when properly secured

e. Awning Fabric and Frame

- Fabric: Heavy-duty, waterproof, UV-resistant material, UV50+, mildew- and rot-resistant, fire-retardant
- Frame: Aluminum alloy, stainless steel, or equivalent lightweight, corrosion-resistant material, reinforced joints for repeated deployment
- Anchoring: Integrated tie-down points or stabilizers for safe deployment

f. Awning Side Walls / Panels

- Detachable side walls for enclosed working or shelter space
- Weather-resistant and UV-protected fabric
- Zippered or Velcro access points

g. Mounting and Interface with MES Trailer (excluded for Lot 1)

The MES shall be mounted on a skid, pallet, frame, or trailer and secured using bolts, clamps, or ratchet tie-downs to ensure stability during transport. The design shall allow rapid unhitching, loading, and unloading using a forklift or manual jacks, without permanent modification to the towing vehicle.

h. Stability and Safety

The MES in trailer shall be designed for safe transport and deployment, incorporating (excluded for Lot 1):

- Tie-down points or stabilizer jacks to resist tipping or wind forces during deployment.
- Rounded or protected edges to prevent injury during handling.
- Adequate clearance from live electrical components to ensure operator safety.
  Use of non-flammable or fire-retardant materials for the enclosure and awning.

i. Trailer Axle, Wheels, and Suspension Requirements (excluded for Lot 1):

The MES trailer shall meet the following requirements:

i. Wheels and Tires

- Heavy-duty, commercial-grade wheels suitable for the fully loaded MES trailer.
- Tires rated for the trailer's GVW, including safety margin for emergency stops and uneven or light off-road terrain.
- Recommended: radial tires with reinforced sidewalls.
  Trailer may include dual wheels or reinforced axle if necessary for load distribution.
- Tire pressure and maintenance shall follow manufacturer specifications for safe operation under full load.
- **Trailer Spare Tires:** at least one (1) complete spare tire set for trailer-based MES units, including rim and mounting hardware.

ii. Suspension

- Reinforced suspension to safely support static trailer weight and dynamic forces during towing, braking, turning, or uneven terrain.
- Rear suspension shall accommodate concentrated MES load or trailer tongue weight without exceeding manufacturer specifications.
- Shock absorbers, leaf springs, or equivalent components shall provide stability during transport on unpaved or disaster-affected roads.

Compliance and Documentation
The bidders shall submit:

- Technical datasheets for the MES enclosure, awning, and trailer.

		• Material specifications for all structural and deployment components. • Deployment and safety instructions demonstrating rapid setup and unhitching from the towing vehicle. • Certification or statement verifying that total MES weight, including enclosure, awning, PV, BESS, and accessories, shall be a minimum of **1 ton and may extend up to 1.5 tons** • Documentation demonstrating compliance with applicable LTO and DPWH road transport transport and structural safety requirements. • Warranty: Minimum 1 year.		
8.0	**AC COMBINER FOR MULTIPLE MES UNITS**	**a. General Description** The AC Combiner Panel shall be a portable, weather-resistant electrical assembly designed to safely interconnect the AC outputs of two (2) to four (4) Mobile Energy System (MES) units. It shall allow multiple MES units to operate in parallel on the AC side, enabling scalable power delivery to support higher loads such as evacuation centers, emergency command posts, and critical facilities. Each MES shall remain electrically independent, with its own inverter, battery, and protection system. The AC Combiner Panel shall combine the individual AC outputs into a single, unified AC distribution point while maintaining safety, selectivity, and ease of deployment. **b. Functional Requirements** The AC Combiner Panel shall: • Allow parallel operation of multiple MES units without backfeeding or cross-interference • Enable rapid connection and disconnection of MES units during field deployment • Provide a single AC output bus for downstream loads or temporary distribution panels • Support modular expansion, allowing additional MES units to be connected as demand increases • Maintain system safety even if one MES is shut down or disconnected • The AC Combiner Panel, including busbars, breakers, conductors, protection devices, and enclosure thermal ratings, shall be appropriately sized based on the total aggregate connected load of the MES units intended for parallel operation. **c. Electrical Design Requirements** • Rated for 230 V AC, single-phase, 60 Hz (or compatible with MES inverter output)		

		• Minimum capacity shall accommodate the combined output of at least two (2) to four (4) MES units, each rated up to 8 kW • Individual incoming breakers for each MES unit • Main outgoing breaker sized according to combined rated output • Neutral and grounding bars sized for full load • No reverse power flow between MES units **d. Protection and Safety Features** The AC Combiner Panel shall include: • Individual Miniature Circuit Breaker (MCB) or Molded-Case Circuit Breaker (MCCB) for each MES input • Main circuit breaker with overload and short-circuit protection • Surge Protection Device (SPD), Type 2 (recommended) • Proper earthing/grounding terminal • Clear labeling for each MES input and output feeder • Interlock or protection scheme to prevent unsafe backfeeding **e. Enclosure** • Enclosure shall be weather-resistant and suitable for outdoor emergency use • Minimum protection rating: IP54 (IP65 or higher) • Portable, skid-mounted, or wall-mountable design • Heavy-duty industrial connectors or terminals for fast deployment • Lockable enclosure to prevent unauthorized access **f. Interface with MES Units** • Compatible with standard MES AC output connectors • Flexible cable entry points to accommodate various deployment layouts • Allows each MES to be operated, isolated, or serviced independently • Disconnection of one MES shall not interrupt operation of remaining units **g. Application and Use Case** The AC Combiner Panel shall be used when: • Multiple MES units are deployed at a single site • Power demand exceeds the capacity of a single MES • Redundancy and load sharing are required • Centralized AC distribution is needed for temporary facilities		

		h. Compliance and Standards The AC Combiner Panel shall comply with or be equivalent to: • IEC 61439 – Low-voltage switchgear and controlgear assemblies (i.e. Type Test Certificates / Design Verification Reports or other equivalent document) • IEC 60947 – Low-voltage switchgear and controlgear (i.e. Component Datasheets) (i.e. SLD or other equivalent document) • PEC (Philippine Electrical Code) • Relevant DOE safety and electrical installation guidelines Test certificates shall be issued by IEC-accredited testing laboratories and ISO Certifications must be **submitted with the Bid**. During post-qualification, the Procuring Entity shall only validate the authenticity, validity, completeness, and conformity of the submitted documents, including the original documents where required under applicable procurement rules.		
9.0	**ANCILLARY SYSTEMS**	In addition to the primary components and technical requirements specified in this TOR, the MES shall include the following additional inclusions and ancillary systems: 1. **Radio Communication System:** Portable or fixed radio system suitable for emergency coordination and disaster response operations For uniformity in the preparation of bids, the following recommended minimum technical parameters for the Radio Communication are hereby provided for guidance: 1. At least **one (1) radio communication unit per MES unit** is required. 2. Either **analog or digital radio communication systems** are acceptable. 3. **VHF Radio System:** Portable or fixed radio system suitable for emergency coordination and disaster response operations Base Station: Enclosure-integrated, NTC type-approved VHF transceiver (136–174 MHz, adjustable 25W–45W output) with low-loss RG-213 cabling feeding an exterior high-gain omnidirectional fiberglass antenna. 2. **Tower / Mast Lighting System:** Deployable tower or mast-mounted lighting system for nighttime operations, safety, and area illuminations. For uniformity in the preparation of bids, the following recommended minimum technical parameters for the		

		Tower/Mast Lighting System are hereby provided for guidance: (a) LED lighting capacity ranging from 100W to 200W, considered sufficient for MES operational and perimeter lighting requirements; (b) Luminous efficacy preferably greater than 140–180 lm/W; (c) The Tower/Mast Lighting System shall have a recommended deployable mounting height of approximately four (4) to six (6) meters, subject to final engineering design and operational requirements; and (d) The Tower/Mast Lighting System shall preferably be provided with a dedicated auxiliary battery system and/or independent power source in order to minimize dependency on the primary MES power supply and ensure continued lighting operation during emergency deployment, maintenance activities, or critical operations. 3. **Satellite Internet System (Starlink or equivalent):** Satellite-based internet connectivity system capable of supporting emergency communications, coordination, and data transmission in off-grid and disaster-affected areas. **Mobility & Baseline Subscription:** The Supplier shall provide, activate, and shoulder the full cost of a **minimum of a standard "Roam on the Go" (Mobile Regional / Roam Unlimited)** satellite internet subscription package. This subscription must feature **unlimited data** i.e., no hard data cap that results in the suspension or termination of connectivity upon reaching a specified data threshold) and shall remain active for a minimum period of **twelve (12) months**, commencing from the date of **successful testing, commissioning, and final acceptance** MES. The MES shall incorporate basic cybersecurity features for all internet-connected components, including user authentication, encrypted communications, access logging, password management, and secure remote access capabilities to protect the system from unauthorized access and cyber threats. The Contractor shall provide documentation demonstrating the implementation of the above cybersecurity measures. 4. **Trailer Spare Tires:** at least one (1) complete spare tire set for trailer-based MES units, including rim and mounting hardware. 5. **Online Monitoring System:** The MES shall be equipped with a local-based monitoring system capable of displaying		

and recording the operational status of the system including but not limited to:

- Solar PV generation
- Battery State of Charge (SOC)
- System alarms and faults
- Load consumption and operational status
- Location of MES units

GPS location tracking and remote system monitoring shall be transmitted through the Satellite Internet System, enabling authorized personnel to remotely monitor the location and operational status of each MES unit in real time.

6. Fire Extinguisher

The MES shall be provided with at least one (1) unit portable fire extinguisher suitable for electrical and lithium-ion battery-related fire hazards. Fire extinguishers shall be compliant with applicable national and international fire safety standards and shall be readily accessible within or adjacent to the MES installation area.

The fire extinguisher should be suitable for:

1. Electrical fires involving energized equipment
2. Incipient-stage lithium-ion battery fires
3. Auxiliary combustible materials within the BESS enclosure

Minimum Requirements:

Item	Minimum Requirement
Fire Extinguisher Type	Clean Agent and/or ABC Dry Chemical Type
Suitable Fire Class	Class A, B, C and energized electrical equipment
Minimum Capacity	5 lbs Clean Agent and/or 10 lbs ABC Dry Chemical
Minimum Rating	2A:10BC or higher
Cylinder Material	Corrosion-resistant steel or aluminum
Accessibility	Easily accessible and unobstructed location
Certification	UL-listed, FM-approved, or equivalent
Standards Compliance	NFPA 10, NFPA 855, applicable IEC/UL standards
Local Compliance	Compliant with requirements of the Bureau of Fire Protection (BFP)

Integration and Compliance

The bidder shall ensure that all additional items shall:

1. Be fully compatible and integrated with the MES without degrading system performance;
2. Comply with applicable IEC standards, Philippine Electrical Code (PEC), and DOE safety requirements;

		3. Be included in the testing, commissioning, training, documentation, and warranty obligations of the Supplier; 4. Be deemed included in the ABC, with no additional cost to the Procuring Entity.		
10	**Visual Design, Color, and Branding Specifications**	To ensure high government visibility, standardized identification, and maximum reflective safety during field and disaster response deployments, all units must strictly comply with the following aesthetic and coating requirements: • Enclosure Exterior Finish and Color: ◦ The entire exterior surface of the MES enclosure (and trailer/skid chassis frames where applicable) shall be treated with an anti-corrosion primer suitable for marine/coastal environments. ◦ The final topcoat must be Pure White (RAL 9010 Glossy) or an equivalent high-reflectivity weather-resistant powder coating. This is mandatory to minimize solar heat absorption and prevent thermal stress on the internal battery systems. ◦ Official Department of Energy (DOE) Painted Logo and Markings: ◦ Placement: The official DOE logo must be prominently affixed on the left exterior side panel, the right exterior side panel, and centered cleanly on the rear access door of each MES unit. For Lot 1 (vehicle-mounted), placement shall be adapted to fit the visible side panels of the flatbed/chassis structure. ◦ Material & Paint Specifications: ◦ Base Primer: Marine-grade, anti-corrosive epoxy primer compatible with the MES exterior surface. ◦ Topcoat Paint: Heavy-duty, industrial-grade polyurethane or acrylic aliphatic polyurethane paint. ◦ Finish & Protection: The paint system must be engineered to withstand high humidity, intense sunlight (UV radiation), and heavy salt mist without fading, chalking, or peeling. A clear, UV-blocking protective topcoat must be applied over the final painted logo. ◦ Reflectivity: To match the high-visibility requirements of field operations, the paint formulation must incorporate premium reflective glass beads or a reflective clear-coat compound to guarantee long-range visibility under low-light and night-time conditions. ◦ Dimensions: Minimum size of 600 mm x 600 mm to guarantee long-range visibility in the field. ◦ Primary Color Palette: Based on the Department of Energy logo, the primary color palette is in DOE		

		Brand Blue hex color code #0000FE and DOE Brand Yellow hex color code #FFFF00.	
11	**Pre-Deployment Connection Requirements**	For MES units intended for pre-deployment or temporary energization of facilities such as schools, barangay halls, evacuation centers, rural health units, command centers, or similar sites, the Supplier shall ensure safe and reliable connection to existing electrical loads and wiring systems. **Temporary Connection Equipment** a. The Supplier shall provide all necessary temporary interface equipment, including: • Power cables and industrial connectors • Temporary distribution/interface panel • Circuit breakers and protection devices • Grounding accessories • Isolation/changeover switch (if required) • Proper labeling and operating instructions **Safety and Protection** b. The connection shall be designed to prevent: • Overload and short circuit • Ground faults • Reverse polarity • Unsafe parallel operation with grid or generators **Deployment Documentation** c. Prior Energization, the Supplier shall submit: • Connection diagram (SLD) • Load allocation and operating estimate • Safety and isolation procedures • Operating limits and restrictions • Deployment plan for the facility **Coordination and Compliance** d. The Supplier shall coordinate with the Procuring Entity, end-user, and Distribution Utility (if applicable) to ensure safe and proper energization. All temporary installations shall comply with the Philippine Electrical Code (PEC) and applicable safety standards.	

VI. LOT STRUCTURE (PURPOSE-BASED REQUIREMENTS)

1. LOT 1: EIGHT (8) UNITS OF MES INTEGRATED IN VEHICLE

1.1 Purpose:

Rapid deployment MES mounted on the vehicle for immediate

emergency response.

1.2 Configuration

1.2.1 The MES shall be designed vehicle mounted or flatbed-integrated MES.

1.2.2 Direct load on vehicle bed or chassis

1.2.3 Payload Capacity 1.5 ton or 1500 kg and shall safely carry, position and support the MES without exceeding the manufacturer's rated payload, axle load, or gross vehicle weight limits.

1.2.4 Compatible with pick up/light vehicle

1.2.5 Rapid deploy/retract system

1.2.6 Quick deployment 270-degree awning system

1.3 Vehicle Requirement

1.3.1 The vehicle shall have an open or modular cargo bed suitable for MES;

1.3.2 Include adequate securing and anchoring provision for safe transport; and

1.3.3 Be equipped with a reinforced chassis and suspension system capable of operating on uneven or unpaved terrain.

1.3.4 All vehicles supplied under Lot 1 shall be duly registered with the Land Transportation Office (LTO) and covered by valid Compulsory Third-Party Liability (CTPL) and comprehensive insurance prior to final contract acceptance. **Provisional acceptance of delivered units may be allowed where the issuance of the Certificate of Registration (CR), Official Receipt (OR), or permanent license plates is pending, provided that the Supplier submits a complete, duly received LTO registration application and proof of payment.** The Supplier shall submit the official LTO registration documents and permanent license plates upon their release as a condition for final contract acceptance and processing of the final milestone payment. All costs associated with registration and insurance shall be borne by the Supplier and shall be deemed included in the bid price.

2. LOT 2: FOURTEEN (14) UNITS OF MES (TOWABLE) FOR DISASTER RESPONSE

2.1 **Purpose:**

Standalone trailer-based MES for evacuation centers and emergency facilities.

2.2 **Configuration**

2.2.1 Trailer-mounted MES

2.2.2 Fully autonomous system (PV+ BESS+ Inverter)

2.2.3 Deployable onsite without vehicle detachment dependency

2.3 **Additional Requirements**

2.3.1 Towable single or tandem axle trailer

2.3.2 Stabilizer jacks for stationary operation

2.3.3 Quick deployment 270 degree awning system

2.3.4 Enhanced enclosure durability for field operations

2.4 **Mandatory Ancillary System**

2.4.1 Radio communication system

2.4.2 Tower/mast lighting

2.4.3 Satellite internet system

2.4.4 Online monitoring system

The enumeration of Mandatory Ancillary Systems under Section VI, Item 2.4 for Lot 2 is intended to emphasize, supplement, and reiterate the ancillary system requirements already established under Section V, Item 9.0 of the Common Baseline Technical Specifications.

Accordingly, such ancillary system requirements shall likewise apply to Lots 1, 3 & 4, unless otherwise expressly exempted, modified, or superseded by specific provisions of the TOR or Supplemental/Bid Bulletin.

3. LOT 3: NINETEEN (19) UNITS OF MES FOR HHS ELECTRIFICATION, INCLUDING SPECIALIZED OUTLET (DLE-COMPATIBLE)

3.1 **Purpose**

The intent of Lot 3 is to provide temporary and deployable access to electricity through low-voltage distribution line extension and specialized household lighting outlets/components supplied by the MES. The system is not intended to establish a permanent utility-grade distribution network requiring dedicated step-down transformer systems.

Accordingly, the required distribution system shall primarily consist of low-voltage distribution line components, protection devices, support structures where applicable, and household connection interfaces necessary to safely distribute electricity for basic lighting and charging applications.

The reference to approximately one hundred (100) households is intended only as a planning and deployment reference. The actual number of households to be served shall depend on the identified deployment location, household clustering, terrain conditions, and the strategic positioning of the Distribution Utility (DU) line extension in order to maximize the practical reach and coverage of the low-voltage distribution lines.

Bidders may propose practical and technically appropriate low-voltage distribution configurations based on their proposed MES architecture and deployment approach, provided that operational safety, voltage regulation, and basic service requirements are maintained.

3.2 **Configuration**

3.2.1 Trailer-mounted MES with LV distribution interface

3.2.2 Designed for microgrid or feeder extension

3.3 **Household Connection System: Specialized household outlet with (100 units):**

3.3.1 LED lighting socket (3W, 12V DC)

3.3.2 USB charging ports

3.3.3 Built-in energy limiter (100 Wh/day max)

3.3.4 Sample Schematic diagram provided in - **Annex A**

4. LOT 4: FIFTEEN (15) UNITS OF MES WITH HYBRID CONTROLLER WITH NPC SPUG EXISTING GENERATOR

2.1 Purpose

The Modular Energy System (MES) shall be designed to operate in coordination with the existing NPC-SPUG diesel-based distribution network. The system shall support controlled interfacing and compatibility between 220-volt system and the 13.2-kV distribution network for stable parallel operation and improved operational efficiency.

2.2 Configuration

Trailer-mounted MES with hybrid controller with power management capability

2.3 System Requirement (GENERAL)

The MES shall include a Hybrid Controller with Power Management System and associated components necessary for safe, reliable, and coordinated operation of Solar PV, Battery Energy Storage System (BESS), inverter system, and diesel generator integration.

The general functional and technical requirements of the Hybrid Controller, including but not limited to energy management, monitoring, protection, synchronization capability, load management, and interface requirements with NPC-SPUG facilities, shall be as specified in **Annex C – Functional and Technical Requirements**.

The Supplier shall ensure that the proposed system is fully compatible with NPC-SPUG existing diesel generating and distribution systems and shall provide all necessary equipment, materials, interfaces, and accessories required for complete integration, whether or not explicitly listed in this TOR.

The **Bidder shall submit with its Bid** the technical datasheets and supporting documentation demonstrating the capabilities and compatibility of the proposed Hybrid Controller and Power Management System, including its capability to manage and coordinate power flow among the Solar PV system, BESS, diesel generator, and loads, as applicable.

VII. GENERAL OPERATIONAL REQUIREMENTS (ALL LOTS)

All MES units shall:

1. Provide minimum **2-day autonomy (≥ 26 kWh usable energy)**
2. Support continuous off-grid operation
3. Allow modular expansion and parallel operation (where applicable)
4. Include real-time monitoring system
5. Be fully tested and commissioned upon delivery

VIII. DOCUMENTATION AND OTHER REQUIREMENTS (ALL LOTS)

Bid Submission and Post-Qualification Validation. All documentary, technical, certification, compliance, warranty, and other requirements expressly identified in this TOR as Bid Submission Requirements shall be submitted together with the Bid.

No such document shall be required to be submitted for the first time during post-qualification.

Post-qualification shall be limited to the validation of the authenticity, validity, completeness, consistency, and conformity of the documents and representations already submitted with the Bid, including the presentation of original documents for verification when required under applicable procurement rules.

Documents that are generated only after award or during contract implementation, such as approved shop drawings, factory acceptance test (FAT) reports, commissioning reports, as-built drawings, final test results, and final acceptance documents, shall be submitted at the applicable stage of implementation and shall not be construed as Bid Submission Requirements.

1. **Technical Documents**

    a. **Full system datasheets and manufacturer brochures for all major components and equipment proposed**, including Solar PV modules, Battery Energy Storage System (BESS), inverter/power conversion system, Hybrid Controller/Power Management System, ACDB, protective devices, and other major equipment, as applicable;

    b. Single-line diagram (SLD)

    c. Electrical layout drawings

    d. Load and autonomy calculations

    e. Operation and Maintenance (O&M) manuals

    f. Preventive maintenance schedule

    g. List of spare parts and consumables

2. **Compliance Documents**

    a. Applicable **IEC certifications and test certificates for the proposed components and equipment**, including test certificates issued by IEC-accredited testing laboratories, where required under this TOR;

    b. **ISO 9001 certification of the manufacturer**, where required under this TOR;

    c. Battery transportation and safety documentation, including **UN 38.3**, as applicable; and

    d. **Statement of compliance with the Philippine Electrical Code (PEC)** and other applicable codes and standards.

    e. Test certificates shall be issued by IEC-accredited testing laboratories and ISO Certifications must be **submitted with the Bid**. During post-qualification, the Procuring Entity shall only validate the authenticity, validity, completeness, and conformity of the submitted documents, including the original documents where required under applicable procurement rules.

3. The Bidder shall submit with its Bid the proposed warranty documents covering the equipment and systems required under this TOR, including the applicable warranty period, coverage, exclusions, and warranty conditions.

IX. INTEGRATION PRINCIPLE

All MES Units under any LOT shall:

1. Be interoperable where technically applicable
2. Be modular and upgradeable
3. Support safe standalone or hybrid operation
4. Maintain compliance regardless of configuration

X. TESTING AND COMMISSIONING

The Supplier shall conduct all required testing and commissioning activities to verify the functionality, safety, performance, and compliance of the MES with the requirements of this TOR. The MES shall be demonstrated to be fully operational prior to acceptance by the Procuring Entity.

1. Factory acceptance test (FAT) results

The Supplier shall conduct a Factory Acceptance Test (FAT) on the MES units designated for Initial Delivery prior to shipment to the project sites.

The FAT shall verify compliance with the approved technical specifications, operational functionality, protection systems, safety features, and performance requirements of the TOR.

Detailed FAT procedures, test parameters, checklists, and pass/fail acceptance criteria may be finalized during contract implementation through coordination between the Procuring Entity and the Supplier.

Any non-conforming items identified during FAT shall be corrected, repaired, replaced, and/or re-tested by the supplier at no additional cost to the Procuring Entity prior to prior to final delivery acceptance of MES Units

The Supplier shall submit a complete FAT Report, including test procedures, test results, inspection records, certifications, corrective actions undertaken, and other supporting documentation demonstrating successful completion of the FAT and compliance with the requirements of this TOR.

The FAT Report and supporting documentation shall be submitted as part of the requirements for the payment milestone corresponding to the Initial Delivery of MES units and shall be subject to review and validation by the Procuring Entity.

Submission and acceptance of the FAT Report shall not relieve the Supplier of its obligation to successfully complete site testing, commissioning, performance verification, and final acceptance requirements upon delivery and installation of the MES units.

2. **Scope of Testing**
Testing and commissioning shall include, but not be limited to, the following:

- Verification of system configuration against the approved Technical Specifications and Bill of Quantities
- Solar PV generation testing under available site conditions
- Battery charging and discharging performance tests
- Inverter operation, load acceptance, and surge capability tests
- Verification of AC and DC protection devices and grounding system
- Functional testing of monitoring and control systems
- Demonstration of safe start-up, shutdown, and emergency isolation procedures

3. **Performance Verification**
The Supplier shall demonstrate compliance with the following minimum performance requirements:

- Minimum usable battery capacity of not less than 26 kWh
- Ability to supply critical loads equivalent to 10–13 kWh/day
- Stable operation under off-grid conditions
- Compliance with the minimum two (2) days autonomy requirement under defined load conditions

4. **Commissioning Report**
The Supplier shall submit a Testing and Commissioning Report, signed by both the Supplier and the Procuring Entity's authorized representative, documenting test procedures, results, and confirmation of compliance with the TOR.

XI. TRAINING AND OPERATION'S MANUAL

1. **Operations Manual**

The Supplier shall provide complete documentation, including technical data sheets, operation and maintenance manuals, as-built plans, system diagrams, test reports, and certifications, which shall be submitted prior to final acceptance.

2. **Conduct of Training**

2.1 The Supplier shall conduct hands-on training for the designated beneficiaries and/or end-users of the MES as part of the Contract, at no additional cost.

2.2 The training program shall be designed to ensure that participants are fully capable of safely, efficiently, and independently operating the system, particularly during disaster response and emergency situations. At a minimum, the training shall cover:

2.2.1 **System Overview and Components** – introduction to the MES, including solar PV array, inverter, battery system (e.g., $LiFePO_4$), control systems, and auxiliary equipment;

2.2.2 **Operational Procedures** – step-by-step instructions on system start-up, normal operation, load management, and shutdown procedures;

2.2.3 **Safety Protocols** – electrical safety, handling precautions, emergency response procedures, and hazard identification;

2.2.4 **Basic Troubleshooting** – identification of common faults, alarms, and recommended corrective actions;

2.2.5 **Preventive Maintenance and Care** – routine inspection, cleaning, battery management, and storage practices to prolong system life;

2.2.6 **Deployment and Mobility Procedures** – safe transport, setup, and commissioning of the MES in field conditions.

2.3 **On-Site Training**

The required training shall be conducted on-site at the respective target beneficiary or designated delivery site and shall not be conducted at any off-site or alternative venue, unless otherwise directed in writing by the Procuring Entity. All costs associated with the conduct of the training, including but not limited to personnel deployment, transportation, accommodation, equipment, materials, and other incidental expenses, shall be borne solely by the Supplier and shall be at no additional cost to the Department of Energy (DOE) or the end-user beneficiaries.

XII. HANDOVER AND ACCEPTANCE

1. **Handover**

After successful testing and commissioning, the Supplier shall turn over the complete final implementation and operational documentation generated during contract implementation, including as-built drawings, final test and commissioning records, O&M documentation, and other documents required for operation and maintenance of the MES.

2. **Acceptance**
Final acceptance shall be issued by the Procuring Entity only after:

- Completion of testing and commissioning

- Submission and approval of all required documents
- Completion of user training
- Rectification of any deficiencies or punch-list items

3. Issuance of the Certificate of Final Acceptance shall signify formal turnover of the MES units and the start of the warranty period.

XIII. WARRANTY

a. The Supplier shall warrant that all MES units and their components are all brand new, free from defects in materials and workmanship, and compliant with the Technical Specifications of this TOR.

b. The Supplier shall provide the following minimum warranty coverage:

c. For the purpose of the warranty. The Supplier shall include the specific cost items 1, 2, 3, 4 and 5.

No.	Component / System	Coverage	Minimum Period	Remarks
1	Complete MES System (integration, wiring, enclosure, awning, ancillary accessories)	Product/ Workmanship	1 year	Covers all defects in materials and workmanship; includes all MES components
2	Inverter / Power Conversion System	Product/ Performance	5 years	hybridEnsures stable operation and compliance with Technical Specifications
3	Battery Energy Storage System (BESS)	Product Warranty	5 years	Includes defects in materials and workmanship
		Performance Warranty	10 years or 6,000 cycles, whichever comes first	Guarantees usable energy, cycle life, and performance compliance
4	Solar PV Modules	Product Warranty	10 years	Covers defects and damage under normal use
		Performance Warranty	20 years	Minimum 84% of rated power at Year 25
5	Vehicle / Trailer	Manufacturer's Warranty	1 year	Standard warranty as per manufacturer

d. The Supplier shall provide warranty coverage for the MES and major system components in accordance with the requirements of the TOR and applicable procurement regulations.

Detailed procedures covering technical support response time, spare parts availability, repair or replacement process, preventive and corrective maintenance support, and fault verification/judgment procedures may be finalized during contract implementation and incorporated into the approved warranty and after-sales support plan.

The supplier shall ensure the availability of adequate technical support capability and replacement parts necessary to maintain the operational reliability of the MES during the warranty period.

XIV. SUBCONTRACTING

The Supplier may subcontract non-material, specialized components or ancillary services (e.g., trailer fabrication and logistics, installation of associated Distribution Lines), provided that:

a. The total value of all subcontracted portions shall not exceed twenty percent (20%) of the total Contract Price;

b. All subcontractors are disclosed and identified in the Supplier's technical bid;

c. Subcontractors comply with the equivalent nationality and eligibility requirements as the Supplier.

Subcontracting shall not relieve the Supplier of any liability or obligation under this procurement item. The Supplier and its subcontractors shall be jointly and severally liable to the Procuring Entity for the proper execution and quality of the subcontracted portion. Any subcontracting arrangement not disclosed during the bidding stage shall be strictly prohibited unless otherwise approved by the HoPE under exceptional circumstances.

XV. DELIVERY SCHEDULE (FOR ALL LOTS)

The Supplier shall be responsible for the complete implementation of the Project, including the production, delivery, installation, testing, commissioning, training, and final acceptance of the MES.

1. The Supplier shall be responsible for the production and delivery, installation, testing, commissioning, training, turnover, and final acceptance of all sixty-seven (67) MES Units, within one hundred twenty (120) calendar days from receipt of the Notice to Proceed (NTP).

2. **Production** – Manufacturing, assembly, integration, and pre-delivery testing of all MES units, including ancillary systems (e.g., radio, tower lights, Starlink, online monitoring, trailer spare tires), in accordance with the Technical Specifications of this TOR.

3. **The minimum delivery requirements per tranche are as follows:**

Delivery Tranche	Timeline from NTP	Min. MES Units
First	75 Calendar Days	Lot 1: 8 units Lot 2: 14 units Lot 3: 9 units Lot 4: 7 units Total: 38 units
Second	90 Calendar Days	Lot 3: 10 units Lot 4: 8 units Total: 18 units
Total	**90 Calendar Days**	**56**

4. The MES units delivered shall be fully assembled, operational, and compliant with the approved technical specification and requirement of this TOR.

5. Testing, commissioning, training, and turnover activities may be conducted progressively per tranche; provided that all such activities, together with the final acceptance of all MES units, shall be completed within the overall contract period of one hundred twenty (120) calendar days from receipt of the NTP

6. The Supplier shall submit, as part of the Inception Report, a Delivery and Deployment Plan indicating the proposed delivery schedule and recommended deployment areas for each tranche, subject to the approval of the Procuring Entity.

7. All costs associated with delivery—including but not limited to packing, loading, inland transport, insurance, permits, handling, unloading, and incidental expenses—shall be deemed included in the Contract Price. No additional payment shall be made for delivery-related activities.

8. Failure to meet the prescribed delivery schedule, or to complete testing, commissioning, training, turnover, and final acceptance within the one hundred twenty (120)-calendar-day contract period, shall subject the Supplier to the applicable provisions on delays and liquidated damages under the Contract.

XVI. RESPONSIBILITIES OF THE SUPPLIER

The Supplier shall be responsible for the complete and proper implementation of the Project including, but not limited to the following:

1. **Project Coordination and Planning**

   1.1 Coordinate with the Procuring Entity and designated end-user for the orderly and effective implementation of the Project.

1.2 Conduct site inspection and assessment, as necessary, to verify site conditions, installation requirements, and suitability of deployment areas. The list of designated sites are attached herein as **Annex B**.

1.3 Prepare and submit a detailed Work Plan, including implementation schedule, delivery timeline, installation activities, testing, commissioning, and training program, subject to approval by the Procuring Entity.

1.4 Designate a Project Supervisor or authorized representative who shall serve as the primary point of contact for the Procuring Entity throughout project implementation.

2. **Design, Supply, Delivery, and Installation**

2.1 Design, supply, deliver, install, test, and commission the complete MES, including all associated electrical, structural, communication, monitoring, and ancillary systems, in accordance with this TOR and approved technical specifications.

2.2 Provide all necessary materials, tools, equipment, qualified personnel, and personal protective equipment (PPE) required for the proper execution of the Project.

2.3 Warrant proper packing, handling, transport, insurance, storage, and delivery of all equipment and materials until final inspection, testing, and acceptance by the Procuring Entity.

2.4 Install and commission the MES at the designated site(s), the list attached herein as **Annex B**, in accordance with approved plans, applicable codes, manufacturer recommendations, and the requirements of this TOR.

3. **Technical Compliance**

3.1 Warrant that all equipment, materials, and components supplied are brand new, free from defects, and fully compliant with the approved specifications, manufacturer standards, and applicable IEC, PEC, and DOE requirements.

3.2 Submit with the Bid all required certifications, test reports, warranties, manuals, brochures, datasheets, and other supporting documents expressly required under this TOR to demonstrate compliance with the technical and documentary requirements.

Documents that are generated only during contract implementation, such as Factory Acceptance Test (FAT) reports, commissioning reports, as-built drawings, and final acceptance records, shall be submitted at the applicable implementation or acceptance milestone.

3.3 Warrant that the MES configuration applicable to the Lot(s) being bid—whether vehicle-integrated, towable for disaster response, or towable for electrification—is fully compliant with the corresponding technical, operational, transport, mounting, deployment, and safety requirements specified in this TOR.

3.4 Where applicable, ensure compatibility with temporary electrification systems, distribution line interfaces, load management requirements, and safe operation in off-grid, unserved, or disaster-affected areas.

4. **Safety and Personnel**

4.1 Implement all necessary occupational health and safety measures during delivery, installation, testing, and commissioning, including the provision of warning signs, barriers, and site safety controls as required.

4.2 Warrant that all deployed personnel are qualified, properly authorized, and appropriately identified while engaged in project implementation.

5. Liability and Accountability

5.1 Be solely responsible for any loss, damage, injury, or third-party claim arising from the execution of the Project due to the Supplier's acts, omissions, negligence, or non-compliance with applicable laws, standards, and contractual obligations.

5.2 Correct, replace, or rectify, at no additional cost to the Procuring Entity, any defective work, damaged equipment, or non-conforming deliverable identified prior to final acceptance or during the warranty period, in accordance with the Contract.

6. Multi-Lot Compliance

6.1 For bidders participating in multiple Lots, each Lot shall be treated as a separate contractual deliverable and shall independently comply with the technical specifications, documentary requirements, delivery schedules, and performance standards applicable to that Lot.

For each Lot being offered, the Bidder shall submit with its Bid the complete technical, operational, certification, compliance, warranty, and other documentary requirements applicable to such Lot under this TOR.

6.2 The Supplier shall clearly identify in its bid submission the Lot(s) being offered and submit complete technical, operational, and documentary compliance for each Lot.

XVII. MANPOWER REQUIREMENTS

The Supplier shall deploy a qualified team to ensure the effective implementation of the project, covering all phases from supply, delivery, installation, testing and commissioning. At a minimum, the following key personnel shall be required:

1. **Project Supervisor / Authorized Representative** - as primary point of contact with the Procuring Entity and shall oversee the overall execution and coordination of all contractual obligations.

2. **Installation and Commissioning Team -** technical personnel responsible for the assembly, installation, setup, testing, and commissioning of the MES at designated project sites.

Following minimum personnel per deployment site:

a. One (1) Lead Electrical Technician / Supervisor - must have relevant experience in installation and commissioning of solar PV or similar energy systems; responsible for overseeing on-site activities and ensuring compliance with technical plans.

b. One (1) Qualified Electrical Technician - must be skilled in electrical installation, wiring, and system integration, and capable of assisting in assembly, installation, and testing of MES components.

c. One (1) Helper / Utility Personnel - provides support in equipment handling, basic assembly, and site preparation.

The Supplier may increase the number of personnel or adjust team composition, provided that the minimum requirements are met and all works are completed within prescribed schedule and in accordance with the TOR. The Supplier shall be solely responsible for the wages, benefits, tools and equipment, and other arrangements and legal obligations with regard to the additional personnel.

3. **Training Instructors -** qualified personnel responsible for conducting hands-on training for end-users and beneficiaries covering system operation, safety procedures, basic troubleshooting and maintenance practices.

XVIII. PATENT AND INTELLECTUAL PROPERTY RIGHTS

The Supplier shall indemnify and hold harmless the Procuring Entity against any and all third-party claims of infringement of patents, trademarks, copyrights, or industrial design rights arising from the use, operation of the Mobile Energy System (MES) or any of its components. The Supplier shall be responsible for all costs, damages, and legal fees resulting from such claims.

Notwithstanding any intellectual property rights associated with the MES, the Supplier shall grant the DOE and designated beneficiaries a perpetual, non- exclusive, royalty - free, and irrevocable license to access, operate, maintain, monitor, and utilize the MES and all software, firmware, technical documentation, manuals and other materials necessary for its complete and uninterrupted operation. The exercise of such rights by the DOE and its designated beneficiaries shall not constitute an infringement of the Supplier's intellectual property rights and shall remain effective for the entire operational life of the MES.

XIX. DELAYS

Delivery of the MES units and/or performance of associated services shall strictly adhere to the Schedule of Requirements specified by the Procuring Entity.

If the Supplier encounters any circumstances likely to impede timely delivery or performance, it shall promptly notify the Procuring Entity in writing, stating the cause, expected duration, and corrective actions.

Upon receipt, the Procuring Entity shall evaluate the situation and may, if justified, grant an extension of time, formalized through a Contract amendment pursuant to applicable laws, rules and regulations.

Any delay in the Supplier's performance shall render the Supplier liable to liquidated damages as provided in the bidding documents and under RA No. 12009 and its IRR, unless an agreed extension has been granted pursuant to the Terms of Reference and bidding documents.

XX. LIQUIDATED DAMAGES

If the Supplier fails to deliver the MES units satisfactorily within the agreed schedule, including any approved extensions, the Supplier shall pay liquidated damages equal to 0.1% (one-tenth of one percent) of the cost of the delayed goods per day of delay until delivery and acceptance by the Procuring Entity.

- The Procuring Entity is not required to prove actual damages to claim liquidated damages.
- The amount may be deducted from payments due to the Supplier or collected from posted securities or warranties, at the discretion of the Procuring Entity.
- If total liquidated damages reach 10% of the total contract price, the Procuring Entity may rescind the Contract and impose additional sanctions.

If delays occur due to factors beyond the Supplier's control, the Supplier shall provide prompt written notice with full details. The Procuring Entity may grant a time extension, at its discretion, with or without adjusting liquidated damages, based on meritorious grounds and applicable laws, rules and regulations.

XXI. SCHEDULE OF PAYMENT

The Payment shall be made to the Supplier in accordance with the applicable government and auditing rules and regulations, subject to the submission of complete supporting documents and certifications by the Procuring Entity.

General Conditions

1. Payment shall be made based on the actual awarded Lot(s) and corresponding Contract Price.
2. Payments shall follow the approved delivery schedule - Section XV.
3. All payments are subject to inspection, testing, commissioning, and issuance of Acceptance Documents.
4. No payment shall be made for unawarded Lots or unaccepted deliverables.
5. For this project, five percent (5%) shall be deducted as retention money per progress billing.
6. For each progress billing, the service provider is required to issue an official billing statement. All payments are subject to taxes and shall be made only upon receipt by the DOE of the required deliverables for the billed milestone.
7. Retention money will be released after one (1) year upon the issuance of the Certificate of Final Acceptance and Satisfactory Performance by the DOE, subject to the evaluation of the compliance and operability of the MES units pursuant to this TOR.

8. The hardware components shall be supported by the Warranty Certificate(s) for each component and duration, as indicated in this TOR.

A. PAYMENT SCHEDULE– LOT 1 & LOT 2 (DISASTER RESPONSE PRIORITY) - Applies if bidder is awarded Lot 1 and/or 2 only, or combined

No.	Deliverables	Requirement	Percentage of Total Contract Amount	Delivery Schedule
1	Inception Report, MES Design and Work Plan	Billing/Invoice, Approved Design & Work Plan	15%	Within 15 CD from NTP
2	Initial Delivery of MES Units Lot 1 - 8 Units Lot 2 - 14 Units	Billing/Invoice, FAT Report, Delivery Receipts, Inspection Report, Partial Acceptance	70%	Within 75 CD from NTP
3	Completion of Delivery, Testing, Commissioning, Training, and Final Acceptance	Billing/Invoice, Final Inspection, Commissioning Report, Training Report, Certificate of Final Acceptance	15%	Within 10 CD after Completion
TOTAL			100.00%	

B. PAYMENT SCHEDULE – LOT 3 & LOT 4 (TECHNICAL / SPECIALIZED MES) - Applies if bidder is awarded Lot 3 and /or Lot 4

No.	Deliverables	Requirement	Percentage of Total Contract Amount	Delivery Schedule
1	Inception Report, MES Design and Work Plan	Billing/Invoice + Approved Design	15%	Within 15 days from NTP
2	First Delivery Tranche Lot 3 - 9 Units Lot 4 - 7 Units	Billing/Invoice, FAT Report, Delivery Receipts, Inspection Report, Partial Acceptance	35%	Within 75 days from NTP
3	Second Delivery Tranche Lot 3 - 10 Units Lot 4 - 8 Units	Billing/Invoice, Delivery Receipts, Inspection Report, Partial Acceptance	35%	Within 90 days from NTP
4	Completion Delivery, Testing, Commissioning, Training, and Final Acceptance	Billing/Invoice, Final Inspection, Commissioning Report, Training Report, Certificate of Final Acceptance	15%	Within 15 days after completion
TOTAL			100.00%	

C. PAYMENT SCHEDULE – MULTIPLE LOT AWARD (LOTS 1 TO 4) - Integrated structure for bidders awarded multiple lots

No.	Deliverables	Requirement	% of Contract Price	Delivery Schedule
1	Inception Report, MES Design and Work Plan	Billing/Invoice + Approved Design and Work Plan	15%	Within 15 days from NTP
2	Initial Delivery **75 days** Lot 1 - 8 Units Lot 2 - 14 Units Lot 3 - 9 Units Lot 4 - 7 Units	Billing/Invoice, FAT Report, Delivery Receipts, Inspection Report, Partial Acceptance	45%	Within 75 days from NTP
3	Second Delivery **120 days** Lot 3 - 10 Units Lot 4 - 8 Units	Billing/Invoice, Delivery Receipts, Inspection Report, Partial Acceptance	35%	Within 90 days from NTP
4	Completion Delivery, Testing, Commissioning, Training, and Final Acceptance	Billing/Invoice, Final Inspection, Commissioning Report, Training Report, Certificate of Final Acceptance	15%	Within 15 days after completion
TOTAL			**100%**	

The Bidder may propose partial delivery of the goods within the required delivery period, subject to the prior written approval of the DOE. Any approval granted for partial delivery shall be for logistical and operational purposes only and shall not constitute a basis for any change in the payment terms, contract price, delivery obligations, warranties, or any other contractual requirements, unless otherwise expressly agreed to in writing by the DOE.

XXII. AFTER-SALES SERVICE AND TECHNICAL SUPPORT

The Supplier shall provide comprehensive after-sales service and technical support for all MES units supplied under this Project to ensure continuous, reliable, and safe operation throughout the warranty period.

1. Scope of After-Sales Service

The after-sales service shall include, but not be limited to, the following:

a. Technical assistance and customer support for operational concerns, system troubleshooting, and maintenance inquiries;

b. Preventive maintenance services, inspection, diagnostics, software/firmware updates, and system performance evaluation;

c. Corrective maintenance and repair of defective or malfunctioning components, including replacement of parts covered by warranty;

d. On-site technical support and emergency response services when remote troubleshooting is insufficient;

e. Provision of qualified service personnel, tools, testing equipment, and spare parts necessary to restore system operability; and

f. Continuous support for the monitoring system, communication devices, ancillary systems, and integration of components supplied under the Contract.

2. Service Response Time

The Supplier shall maintain an accessible technical support mechanism throughout the warranty period and comply with the following minimum response requirements:

a. Acknowledge all technical concerns within twenty-four (24) hours from receipt of notice by the Procuring Entity;

b. Provide remote technical assessment or troubleshooting within forty-eight (48) hours;

c. Mobilize qualified technical personnel for on-site support within:

   i. Five (5) calendar days for Luzon sites;

   ii. Seven (7) calendar days for Visayas and Mindanao sites; or

   iii. Within a reasonable period acceptable to the Procuring Entity for geographically isolated and disadvantaged areas (GIDAs), considering weather and transport conditions.

d. Restore the affected MES unit to operational condition within fifteen (15) calendar days from inspection, unless replacement parts or force majeure conditions reasonably require a longer rectification period, subject to approval by the Procuring Entity.

3. Spare Parts and Consumables

a. The Supplier shall ensure the availability of critical spare parts, replacement components, and consumables necessary for maintenance and repair during the warranty period.

b. The Supplier shall submit a recommended spare parts list, including indicative lead times and serviceable components, as part of the project documentation.

c. Replacement parts supplied during the warranty period shall be brand new, compatible with the MES, and compliant with the Technical Specifications.

4. Service Center and Technical Contact

a. The Supplier shall designate an official technical support contact person and provide the corresponding contact details, including mobile number, email address, and service hotline.

b. The Supplier shall maintain a local service capability, authorized service partner, or technical representative within the Philippines capable of supporting all deployed MES units.

5. Preventive Maintenance Obligations

The Supplier shall conduct preventive maintenance inspections **at least twice (2) during the one (1)-year warranty period**, with the warranty period commencing upon the **final acceptance of the Mobile Energy System (MES)** by the Procuring Entity. Preventive maintenance inspections shall be performed at a **semi-annual frequency**, or approximately **once every six (6) months**, unless otherwise approved by the Procuring Entity.

The preventive maintenance shall include:

a. Inspection of PV modules, mounting systems, and wiring;

b. Battery diagnostics and BMS verification;

c. Inverter and protection system inspection;

d. Functional testing of ancillary systems;

e. Verification of grounding and safety devices; and

f. Submission of maintenance service reports to the Procuring Entity.

6. Failure to Provide Support

Failure of the Supplier to provide the required after-sales support, response, repair, or warranty services within the prescribed periods, without valid justification acceptable to the Procuring Entity, shall constitute grounds for the imposition of applicable penalties, warranty enforcement measures, or other remedies under the Contract and applicable procurement laws, rules, and regulations.

ANNEX A
MES FOR HHS ELECTRIFICATION,
INCLUDING SPECIALIZED OUTLET (DLE-COMPATIBLE)

This Annex to the TOR outlines the minimum technical requirements for the Specialized Outlet and its accessories, consisting of 12V DC LED light bulbs and a torch with charging cable, intended for use with the MES to facilitate household electrification.

Lot 3 — Scope of Supply and Delivery

Lot 3 also includes the supply and delivery of the following items:

			
Specialized Outlet MES-compatible — 1 per household	**3W, 12V DC LED Bulb** 3 pcs / household (100 pcs total)	**1W, 12V DC LED Bulb** 1 pc / household (100 pcs total)	**Torch w/ Charging Cable** 100 pieces total

General Provisions

- All items shall be brand new, free from defects, and compliant with applicable national and international standards.
- The supplier shall be responsible for the complete and timely delivery of the Specialized Outlet and the specified accessories along with the delivery of the MES unit.
- The Specialized Outlet shall be fully compatible with the MES and designed for connection to the distribution line in accordance with the MES design.
- The supplied LED light bulbs and torch with charging cable shall be compatible with the Specialized Outlet and the MES 12V DC output.
- Lot 3 procurement covers the supply and delivery of the Specialized Outlet and the accessories specified herein. It does not include the supply of other Distribution Line Extension (DLE) materials, electrical distribution components, or installation works unless otherwise specified in the Contract.

2. Specialized Household Outlet

A specialized outlet shall be included as part of the materials for each household (HH) connection. This outlet is intended to serve as the primary interface for end-users to safely access electricity supplied by the MES.

The specialized outlet shall be designed to support the connection of the provided 3W, 12V DC LED light, ensuring reliable and efficient lighting for the household. It shall include a dedicated lighting socket compatible with the specified LED light, allowing direct plug-in use without the need for additional wiring or modification.

Auxiliary Features

In addition, the outlet may incorporate auxiliary features such as USB ports (including Type-A and Type-C) and a voltage display, to enable safe charging of low-power devices and provide basic monitoring of the power supply.

Energy Limiter / Circuit Breaker

To ensure equitable distribution and prevent overconsumption, the outlet shall be equipped with an integrated energy limiter or circuit breaker mechanism. This device shall regulate usage such that household energy consumption does not exceed 100 watt-hours (Wh) per day. The limiter/breaker shall automatically restrict or interrupt supply once the allowable consumption threshold is reached and shall reset in accordance with the system design (e.g., daily reset, disconnect mechanism, or over-current protection).

Design Requirements

- Safe and user-friendly operation
- Compatibility with the MES output specifications
- Durability for household use in rural or off-grid environments

This specialized outlet is a critical component to ensure immediate usability of the lighting system upon installation by the Distribution Utility.

Restrictions on Use

The LED jack/socket outlets are intended solely for low-power LED lighting applications under the MES household electrification system and shall not be used for powering household appliances, heating devices, cooking equipment, motors, or other high-load electrical devices.

Reference Illustrations & Equivalence

The illustrations and dimensions provided in the TOR are for reference purposes only. Bidders may propose equivalent or improved LED jack/socket configurations suitable for the intended lighting application, provided that the proposed design remains safe, durable, and compatible with the MES output specifications

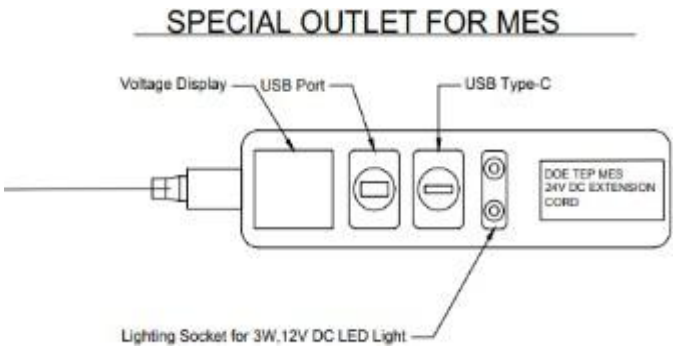

Figure 2: Sample Drawing Specialized HHs Outlet

ANNEX B

List of Areas for Deployment of MES Units

Lot 1 — MES Integrated in Vehicle

Island Group	DOE Office	Province	Target HHs Beneficiaries	Location	Coordinates	No. MES	Unit Cost (M Php)
Luzon	Main Office	Manila	~400	Energy Center, 34th St., Rizal Drive, Bonifacio Global City, Taguig City, Philippines 1632	14.553439, 121.056942	5	10
Visayas	Visayas Office	Cebu	~100	Escario Building, 0735 N Escario St, Cebu City, 6000 Cebu	10.317049, 123.893128	2	10
Mindanao	Mindanao Office	Davao	~100	3rd Floor, Tolentino 2020 Building, Candelaria Avenue Ecoland, Matina Pangi Rd, Davao City, 8000 Davao del Sur	7.053991, 125.602462	1	10
Total			**~600**			**8**	**80,000,000**

Lot 2 — MES (Towable) for Disaster Response

Island Group	Distribution Utility	Province	Target HHs	No. MES	Unit Cost (M Php)	DU Main Office Location	Coordinates
Luzon	BATANELCO	Batanes	~200	2	8.3	Basco, 3900 Batanes	20.444523, 121.967353
Luzon	ORMECO	Oriental Mindoro	~100	1	8.3	Brgy. Sta. Isabel, Calapan City, Oriental Mindoro	13.369246, 121.161177
Luzon	FICELCO	Catanduanes	~100	1	8.3	Marinawa, Bato, 4801 Catanduanes	13.596121, 124.266743
Luzon	TISELCO	Masbate	~100	1	8.3	San Jacinto, Ticao Island, 5417 Masbate	12.567047, 123.736745
Luzon	CANORECO	Camarines Norte	~100	1	8.3	Jose P. Rizal St., Daet, 4600 Camarines Norte	14.126508, 122.937920
Luzon	AURELCO	Aurora	~100	1	8.3	Barangay Reserva, Baler, 3200 Aurora	15.843588, 121.540720
Visayas	ESAMELCO	Eastern Samar	~200	2	8.3	Borongan City, 6800 Eastern Samar	11.659886, 125.461072
Visayas	NORSAMELCO	Northern Samar	~200	2	8.3	Brgy. Magsaysay Bobon, 6401 Northern Samar	12.509863, 124.590446
Island Group	**Distribution Utility**	**Province**	**Target HHs**	**No. MES**	**Unit Cost (M Php)**	**DU Main Office Location**	**Coordinates**

Visayas	ILECO III	Iloilo	~100	1	8.3	Brgy. Preciosa, Sara, 5014 Iloilo	11.253967, 123.003879
Visayas	NOCECO	Negros Occidental	~100	1	8.3	Kabankalan City, 6127 Negros Occidental	9.999506, 122.812965
Visayas	LEYECO II	Leyte	~100	1	8.3	Real St. Sagkahan District, Tacloban City, 6500 Leyte	11.229470, 125.001322
Total			**~1,400**	**14**	**116,200,000**		

Lot 3 — 19 Units of MES for HH Electrification, Including Specialized Outlet (DLE-Compatible)

Island	Electric Cooperative	Province	Municipality	Barangay	DU Main Office Location	Coordinates	No. MES	Unit Cost (Php)
Luzon	QUEZELCO II	Quezon	Burdeos	Bonifacio	Brgy. Gumian, Infanta, 4336 Quezon	14.695368, 121.607100	1	9,200,000
Luzon	PALECO	Palawan	Balabac	Sebaring	North National Highway, Brgy. Tiniguiban, Puerto Princesa City, 5300 Palawan	9.768488, 118.747625	1	9,200,000
Luzon	PALECO	Palawan	El Nido	San Fernando	(same DU office as above)	(same as above)	1	9,200,000
Luzon	PALECO	Palawan	Agutaya	Matarawis	(same DU office as above)	(same as above)	1	9,200,000
Luzon	PALECO	Palawan	Cuyo	Caponayan	(same DU office as above)	(same as above)	1	9,200,000
Luzon	PALECO	Palawan	Cuyo	Lubid	(same DU office as above)	(same as above)	1	9,200,000
Visayas	NORSAMELCO	N. Samar	San Vicente	Maragat	Brgy. Magsaysay Bobon, 6401 Northern Samar	12.509738, 124.591615	1	9,200,000
Visayas	NORSAMELCO	N. Samar	San Vicente	Sangputan	(same DU office as above)	(same as above)	1	9,200,000
Mindanao	SURSECO II	Surigao Sur	Cagwait	Aras-Asan	Tandag, 8300 Surigao del Sur	9.066272, 126.196785	1	9,200,000
Mindanao	SURSECO II	Surigao Sur	Cantilan	General Island	(same DU office as above)	(same as above)	1	9,200,000
Mindanao	DIELCO	Dinagat	Basilisa	Poblacion	Justiniana, San Jose, 8427 Dinagat Islands	10.012028, 125.581897	1	9,200,000
Mindanao	DIELCO	Dinagat	Basilisa	Imee	(same DU office as above)	(same as above)	1	9,200,000
Mindanao	DIELCO	Dinagat	Basilisa	Roxas	(same DU office as above)	(same as above)	1	9,200,000

Mindanao	TAWELCO	Tawi-Tawi	Panglima Sugala (Balimbing)	Belatan Halu / Tubig-Boh	Bongao, 7500 Tawi-Tawi	5.021961, 119.769392	1	9,200,000
Mindanao	SIASELCO	Sulu	Siasi	Bulansing Tara	Poblacion, Siasi, 7412 Sulu / c/o 506 Delos Reyes Drive, Talontalon, Zamboanga City	5.545323, 120.823368 / c/o 6.911579, 122.117610	1	9,200,000
Mindanao	SIASELCO	Sulu	Siasi	Duhol Tara	(same DU office as above)	(same as above)	1	9,200,000
Mindanao	SIASELCO	Sulu	Siasi	Southwestern Bulikullul	(same DU office as above)	(same as above)	1	9,200,000
Mindanao	SULECO	Sulu	Pangutaran	Tonggasang	Bus-bus, Jolo, 7400 Sulu	6.055688, 121.003513	1	9,200,000
Mindanao	CASELCO	Tawi-Tawi	Turtle Islands	Taganak Poblacion	Mapun, 7508 Tawi-Tawi	6.986633, 118.498616	1	9,200,000
Total							**19**	**174,800,000**

Lot 4 — MES (Towable) for NPC

Island Group	Province	DU / Coop	NPC-SPUG Site	Capacity (kW)	Phase	No. MES	Unit Cost (Php)
Visayas	Bohol	BOHECO I	Hambongan DPP	130	3 phase	2	9,500,000
Visayas	Bohol	BOHECO I	Panagpasan DPP	38	3 phase	2	9,500,000
Visayas	E. Samar	ESAMELCO	Cagusu-an DPP / Homonhon	20	1 phase	1	9,500,000
Visayas	E. Samar	ESAMELCO	Sta. Monica DPP	150	3 phase	2	9,500,000
Visayas	N. Samar	NORSAMELCO	Tarnate DPP	150	3 phase	2	9,500,000
Visayas	S. Leyte	SOLECO	San Pedro	50	3 phase	1	9,500,000
Visayas	S. Leyte	SOLECO	Pablo	50	3 phase	1	9,500,000
Mindanao	Zamboanga City	ZAMCELCO	Tumalutab DPP	150	3 phase	2	9,500,000
Mindanao	Zamboanga City	ZAMCELCO	Manalipa	40	3 phase	1	9,500,000
Mindanao	Basilan	BASELCO	Tapiantana DPP	10	3 phase	1	9,500,000
Total						**15**	**142,500,000**

Lot 4 - MES (towable) for NPC

NPC DPP	Major Island Group	Region	Province	Municipality	Barangay	Coordinates	No. of Households	No. of MES Allocation	MES Project Cost
NPC-Manalipa DPP /ZAMCELCO	Mindanao	IX (Zamboanga Peninsula)	Zamboanga del Sur	Zamboanga City	Manalipa	6.890333333333333, 122.273083333	103	1	9.5
NPC-Tapiantana DPP /ZAMCELCO	Mindanao	BARMM	Basilan	Tabuan -Lasa	Sulloh (Tapiantana)	6.311527777777778, 121.965805556	118	1	9.5
NPC-Pangapasan DPP /BOHECO I	Visayas	VII	Bohol	TUBIGON	Pangapasan Island	9.998083333333333, 123.941222222222	193	2	9.5
NPC-Hambongan DPP /BOHECO I	Visayas	VII	Bohol	INABANGA	Hambongan	10.070388888889, 124.023527777778	190	2	9.5
NPC-Cagusu-an DPP /ESAMELCO	Visayas	VIII	E. Samar	GUIUAN	Cagusu-an	10.717000000000, 125.816777778	185	1	9.5
NPC- Tarnate DPP/ESAMELCO	Visayas	VIII	N. Samar	SAN VICENTE	Tarnate	12.3572, 124.0533	344	2	9.5
NPC- Sta. Monica DPP/NORSAMELCO)	Visayas	VIII	N. Samar	SAN VICENTE	Santa Monica	12.113138888889, 125.554416667	352	2	9.5
NPC - San Pedro DPP/SOLECO	Visayas	VIII	S. Leyte	Hinutangan	San Pedro	10.453501, 125.225597	138	1	9.5
NPC - San Pablo DPP/SOLECO	Visayas	VIII	S. Leyte	Hinutangan	San Pablo	10.429314037094105, 125.22081116920273	115	1	9.5
NPC - Tumalutab DPP/ZAMCELCO	Mindanao	IX	Zamboanga del Sur	Zamboanga City	Tumalutab	6.9828, 122.3537	243	2	9.5
Total								**15**	**142.5**

Visual Map - https://datastudio.google.com/reporting/b74cf283-0a43-4430-81c0-a9a378bbf6d8

ANNEX C

Functional and Technical Requirements
MES with Hybrid Controller with Power Management System
for NPC Underserved Areas

In underserved areas, power is often less than 24/7 service. The modular hybrid controller will act as the intelligent bridge between the single-phase MES and the existing diesel generator (3-phase).

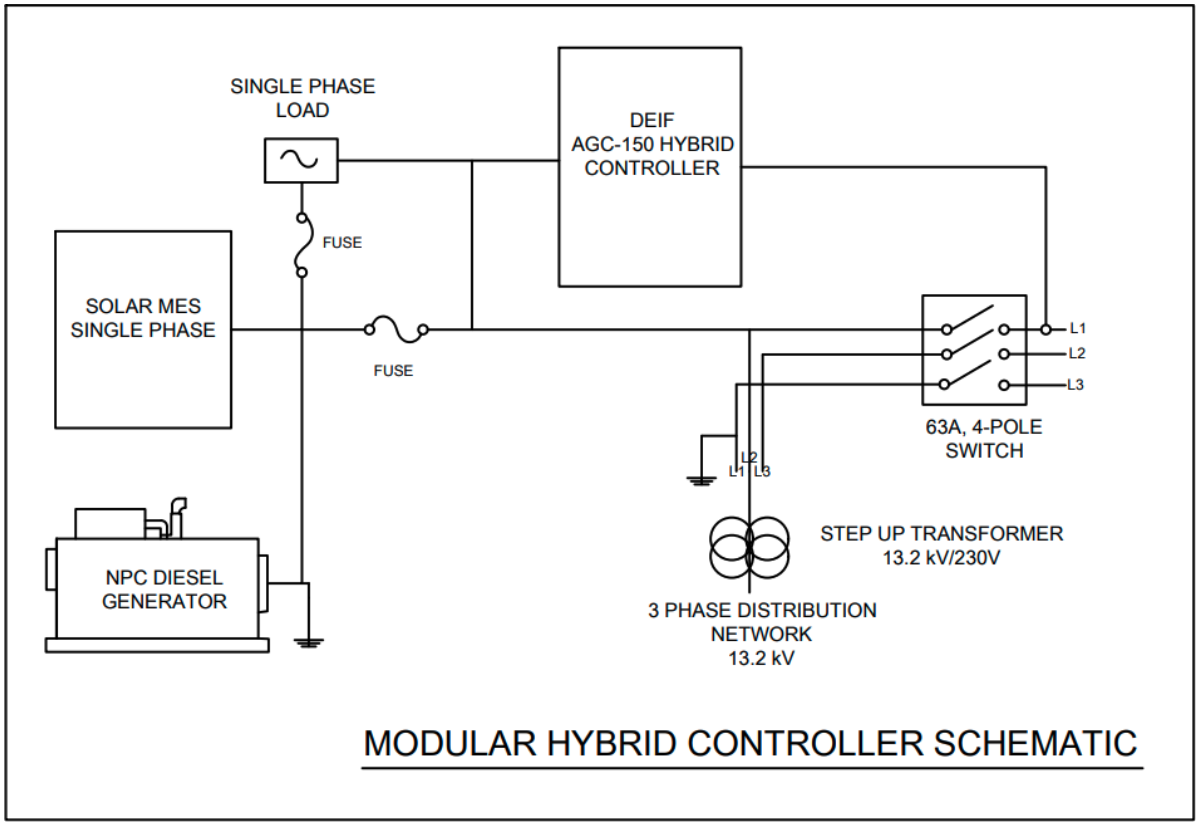

Table 2. Minimum Sample Technical Schematic

Item / Equipment	Description	Status	Purpose	Focal
Diesel Generator	3-phase	Running at Max	Provides the base load stability	NPC
Solar PV Array	8 kW (minimum)	Active (Daylight)	Reduces the load on the batteries or generator	Supplier
Battery Energy Storage System	28.8 kWh Battery (minimum)	Charging / Discharging	Supplies the gap: stores energy and supports load demand	Supplier
Inverter	Hybrid Three Phase	Power Assist	Converts DC power to AC power and interfaces with the AC bus	Supplier
Hybrid Controller and Power Management System	—	Active	Supervises and coordinates generator, PV, battery, and inverter operation	Supplier

Hybrid Controller and Power Management System

The Supplier shall provide a Hybrid Controller and Power Management System, or equivalent solution, capable of integrating and coordinating the operation of the MES inverter, Battery Energy Storage System (BESS), Solar PV system, and existing NPC diesel generating facilities.

At a minimum, the Hybrid Controller and Power Management System shall provide the following functions:

1. Automatic management and coordination of power flow between Solar PV, BESS, and diesel generator sources;
2. Automatic battery charging and discharging control based on system operating conditions and battery State of Charge (SOC)
3. Automatic source selection and transfer between available power sources;
4. Automatic diesel generator start/stop functionality, where permitted by the generator control system;
5. Voltage, frequency, and phase monitoring for safe operation and integration with the diesel generator system;
6. Generator support and renewable energy optimization functions to maximize the utilization of available solar energy and battery storage;
7. Interface capability with existing three-phase diesel generators and three-phase inverter systems, including facilities operating within NPC-SPUG distribution networks;
8. Protection functions including anti-islanding, reverse power, over/under voltage, over/under frequency, loss of synchronization, overload, and other abnormal operating conditions;
9. Local and remote monitoring of system status, operating parameters, alarms, events, and historical operating data;
10. Event logging, alarm management, and reporting functions;
11. Black start capability using the BESS to energize the MES in the absence of generator power; and
12. Provision for future integration with microgrid control, energy management, or supervisory monitoring systems.

Where synchronization or parallel operation with the diesel generator is included in the Supplier's proposed design, the system shall provide the necessary synchronization, load sharing, frequency regulation, power factor control, and associated protection functions. Such features shall not be mandatory unless required by the Supplier's proposed operating philosophy or site-specific requirements.

The Supplier shall provide all equipment, materials, interfaces, protection devices, software, and ancillary components necessary to ensure complete, safe, reliable, and fully functional integration of the MES with the existing NPC facilities, whether or not such items are specifically identified in this TOR.

ANNEX D

Similar Projects for Single Largest Completed Contract (SLCC)

SLCC REQUIREMENT FOR MOBILE ENERGY SYSTEM (MES)

The SLCC shall demonstrate the Bidder's capability to supply, integrate, install, test, and commission an energy system of technical scope and complexity comparable to the Mobile Energy System (MES).

For purposes of determining similarity, an acceptable similar project shall fall under any one of the following categories:

a. Off-grid or hybrid renewable energy systems;

b. Solar photovoltaic (PV) systems integrated with Battery Energy Storage Systems (BESS);

c. Microgrid or distributed energy systems;

d. Temporary, mobile, transportable, or emergency power systems; or;

e. Hybrid power systems integrating renewable energy, battery storage, inverter/power conversion systems, backup generation, and/or energy management or control systems.

Similarity shall be assessed based on the system function, technical scope, scale, integration requirements, and complexity of the completed contract, and not solely on the title or name of the project.

Equivalency of SLCC

Where the submitted SLCC does not fall within any of the foregoing categories of similar projects but demonstrates substantially equivalent technical capability, scope, and complexity comparable to the MES, the Bidder may submit a written justification of equivalency, together with supporting documents demonstrating such equivalency.

The Bidder shall not be required to submit both a qualifying similar project and a separate equivalency justification. An equivalency justification shall be required only where the submitted SLCC does not fall within the identified categories of similar projects.

Supporting Documents for SLCC

The SLCC shall be supported by the following documents, which shall be submitted with the Bid:

a. Certificate of Completion or Acceptance;

b. Contract Agreement and/or Purchase Order;

c. Certification from the end-user, where applicable;

d. Commissioning Report, where applicable; and

e. System Technical Summary describing the scope, major equipment, capacity, and principal technical features of the completed project.

During post-qualification, the Procuring Entity shall validate the authenticity, validity, completeness, and conformity of the submitted SLCC documents against the original documents, as required under applicable procurement rules.

Annex E

Visual Design, Color, and Branding Specifications

MOBILE ENERGY SYSTEM

Annex F

Master Summary by Delivery Tranche

Lot	Major Island	Region / Office	Province	Distribution Utility / Station	MES Units	Delivery Tranche	Timeline (From NTP)
Lot 1	Luzon	Main Office	Manila	DOE Manila	2	1st	75 Calendar Days
Lot 1	Visayas	Visayas Office	Cebu	DOE Cebu	2	1st	75 Calendar Days
Lot 1	Mindanao	Mindanao Office	Davao	DOE Davao	1	1st	75 Calendar Days
Lot 1	Luzon	Main Office	Manila	DOE Manila	3	1st	75 Calendar Days
Lot 2	Luzon	Region II	Batanes	BATANELCO	2	1st	75 Calendar Days
Lot 2	Luzon	Region IV-B	Oriental Mindoro	ORMECO	1	1st	75 Calendar Days
Lot 2	Luzon	Region V	Catanduanes	FICELCO	1	1st	75 Calendar Days
Lot 2	Luzon	Region V	Camarines Norte	CANORECO	1	1st	75 Calendar Days
Lot 2	Luzon	Region V	Masbate	TISELCO	1	1st	75 Calendar Days
Lot 2	Luzon	Region III	Aurora	AURELCO	1	1st	75 Calendar Days
Lot 2	Visayas	Region VI	Iloilo	ILECO III	1	1st	75 Calendar Days
Lot 2	Visayas	Region VI	Negros Occidental	NOCECO	1	1st	75 Calendar Days
Lot 2	Visayas	Region VIII	Eastern Samar	ESAMELCO	2	1st	75 Calendar Days
Lot 2	Visayas	Region VIII	Northern Samar	NORSAMELCO	2	1st	75 Calendar Days
Lot 2	Visayas	Region VIII	Leyte	LEYECO II	1	1st	75 Calendar Days
Lot 3	Luzon	Region IV-B	Palawan (4 Brgys)	PALECO	5	1st	75 Calendar Days
Lot 3	Visayas	Region VIII	Northern Samar	NORSAMELCO (San Vicente)	2	1st	75 Calendar Days
Lot 3	Luzon	Region IV-A	Quezon	QUEZELCO II (Burdeos)	1	1st	75 Calendar Days
Lot 3	Mindanao	Region XIII	Surigao del Sur	SURSECO II (Cagwait/Cantilan)	2	2nd	120 Calendar Days
Lot 3	Mindanao	Region XIII	Dinagat Islands	DIELCO (Basilisa)	3	2nd	120 Calendar Days
Lot 3	Mindanao	BARMM	Tawi-Tawi	TAWELCO (Panglima Sugala)	1	1st	75 Calendar Days
Lot 3	Mindanao	BARMM	Sulu	SULECO (Pangutaran)	1	2nd	120 Calendar Days

Lot	Major Island	Region / Office	Province	Distribution Utility / Station	MES Units	Delivery Tranche	Timeline (From NTP)
Lot 3	Mindanao	BARMM	Sulu	SIASELCO (Siasi)	3	2nd	120 Calendar Days
Lot 3	Mindanao	BARMM	Tawi Tawi	CASELCO (Turtle Island)	1	2nd	120 Calendar Days
Lot 4	Visayas	Region VII	Bohol	Hambongan DPP / BOHECO I	2	1st	75 Calendar Days
Lot 4	Visayas	Region VII	Bohol	Panagpasan DPP / BOHECO I	2	1st	75 Calendar Days
Lot 4	Visayas	Region VIII	Eastern Samar	Cagusu-an DPP / ESAMELCO	1	1st	75 Calendar Days
Lot 4	Visayas	Region VIII	Northern Samar	Tarnate DPP / ESAMELCO	2	1st	75 Calendar Days
Lot 4	Visayas	Region VIII	Northern Samar	Sta. Monica DPP / NORSAMELCO	2	2nd	120 Calendar Days
Lot 4	Visayas	Region VIII	Southern Leyte	San Pedro DPP / SOLECO	1	2nd	120 Calendar Days
Lot 4	Visayas	Region VIII	Southern Leyte	San Pablo DPP / SOLECO	1	2nd	120 Calendar Days
Lot 4	Mindanao	BARMM	Basilan	Tapiantana DPP / ZAMCELCO	1	2nd	120 Calendar Days
Lot 4	Mindanao	Region IX	Zamboanga del Sur	Tumalutab DPP / ZAMCELCO	2	2nd	120 Calendar Days
Lot 4	Mindanao	Region IX	Zamboanga del Sur	Manalipa DPP / ZAMCELCO	1	2nd	120 Calendar Days
TOTAL					56		

Section VIII. Philippine Bidding Document Related Forms

Notes to the Philippine Bidding Document Related Forms

The Bidder shall complete and submit with its Bid the **Bid Form** and **Price Schedules** in accordance with ITB Clause 13 with the requirements of the Bidding Documents and the format set out in this Section.

When requested in the BDS, the Bidder should provide the **Bid Security**, either in the form included hereafter or in another form acceptable to the Procuring Entity, pursuant to ITB Clause 16.

The **Contract Form** should incorporate any correction or modification to the accepted Bid resulting from price corrections when it is finalized at the time of contract award. The Price Schedule and Schedule of Requirements which form part of the contract should be modified accordingly.

The **Omnibus Sworn Statement** must be completed by all Bidders in accordance with ITB Clause 4.2. Failure to submit it with the Bid shall result in the rejection of the Bid and the Bidder's disqualification.

The **Performance Securing Declaration, if allowed and Bank Guarantee Form for Advance Payment** shall be completed only by the successful Bidder in accordance with one of the forms indicated herein by the Procuring Entity, and pursuant to **GCC** Clause 13 and its corresponding SCC provision.

TABLE OF CONTENTS

Bid Form for Procurement of Goods 135

Price Schedule for Goods Offered from Within the Philippines.....137

Price Schedule for Goods Offered from Abroad.....138

Contract Form.....139

Omnibus Sworn Statement Form.....142

Bid Securing Declaration Form.....146

Additional Forms:

a. **STATEMENT OF ONGOING GOVERNMENT AND PRIVATE CONTRACTS INCLUDING CONTRACT AWARDED BUT NOT YET STARTED**
b. **STATEMENT OF SINGLE LARGEST COMPLETED CONTRACT**

Bid Form for Procurement of Goods

[Note: The duly accomplished form shall be submitted with the Bid]

BID FORM

Project Identification No.: *[Insert number]*

To: [Name of Procuring Entity]

Having examined the Philippine Bidding Documents (PBD) including the Supplemental Bid Bulletin Numbers [insert numbers], the receipt of which is hereby duly acknowledged, we, the undersigned, declare that:

a) I/We have no reservation to the PBD, including the Supplemental Bid Bulletins, for the Procurement Project [Project Title];

b) Select one, delete the other

- I/We undertake to deliver the Goods in accordance with the delivery schedule in the Schedule of Requirements;
- I/We offer to execute the Works for this Contract in accordance with the PBD;

c) The total price of our Bid in words and figures, excluding any discount offered below, is *[insert information]*

d) The discounts offered and the methodology for their application, if any, are: *[insert information];* or indicate N/A if no discount offered]

e) The total bid price in words and figures, after applying the applicable discount, includes the cost of all taxes, such as, but not limited to *[specify the applicable taxes, e.g. (i) value added tax (VAT), (ii) income tax, (iii) local taxes, and (iv) other fiscal levies and duties]*, which are itemized in the *[Select one, delete the other:* the Price Schedules/ Detailed Estimates].

f) This Bid shall remain valid within a period stated in the PBD, and it shall be binding upon me/us at any time before the expiration of that period;

g) If our bid is accepted, I/we commit to enter to a contract and provide a performance security in the form, amounts, and within the times prescribed in the PBD, and hereby acknowledge the consequences under the IRR of RA No. 12009 on forfeiture of Bid Security or enforcement of Bid Securing Declaration and on Blacklisting.

Until a formal Contract is prepared and executed, this Bid, together with your written acceptance thereof and your Notice of Award, shall be binding upon the Bidder.

I/We understand that you are not bound to accept the Lowest Calculated Bid or any Bid you may receive.

I/We certify/confirm that we comply with the eligibility requirements pursuant to the PBD.

The undersigned is authorized to submit the bid on behalf of [Name of the Bidder] as evidenced by the attached [State the Written Authority].

I/We acknowledge that failure to sign each and every page of this Bid Form, including the attached Schedule of Prices, shall be a ground for the rejection of our bid.

Duly authorized to sign the Bid for and behalf of:

[Insert Bidder's Name]

[Signature over Printed Name]
[Position/Designation]
[Date]

Price Schedule for Goods

Name of Bidder _____. Project ID No. _____. Page _ of _____

Pricing Details for Goods Offered from Within the Philippines

1	2	3	4	5	6	7	8	9	10
Item	Description	Source of Domestic Product, as certified by the Relevant Agency	Quantity	Unit price exw per item	Transportation and all other costs incidental to delivery, per item	Sales and other taxes payable if Contract is awarded, per item	Cost of Incidental Services, if applicable, per item	Total Price, per unit (col5+6+7+8)	Total Price delivered Final Destination (col 9)x(col 4)

Summary of Bid Prices

*The Procuring Entity may modify the table below as necessary to comply with the requirements of the Procurement Proje*ct.

1	2	3	4
Item No.	Item	Particulars / Description	Total Amount

Name:_____

Signature:_____

Duly authorized to sign the Bid for and behalf of:_____

Price Schedule for Goods

Name of Bidder _____. Project ID No. _____. Page _ of _____

Pricing Details for Goods Offered from Abroad

1	2	3	4	5	6	7	8	9
Item	Description	Country of origin	Quantity	Unit price CIF port of entry (specify port) or CIP named place (specify border point or place of destination)	Total CIF or CIP price per item (col. 4 x 5)	Unit Price Delivered Duty Unpaid (DDU)	Unit price Delivered Duty Paid (DDP)	Total Price delivered DDP (col 4 x 8)

Summary of Bid Prices

The Procuring Entity may modify the table below as necessary to comply with the requirements of a specific Project.

1	2	3	4
Item No.	Item	Particulars / Description	Total Amount

Name:_____

Signature:_____

Duly authorized to sign the Bid for and behalf of:_____

Contract Form

[Note: The duly accomplished form is not required to be submitted with the Bid but shall be submitted within ten (10) days after receiving the Notice of Award]

CONTRACT FOR [Insert Project Title]

This CONTRACT executed on the _____day of _____20_____by and between:

[Name of Procuring Entity], a government agency of the Republic of the Philippines, hereinafter called "the Entity";

-and-

[Name of Supplier /Contractor/ Consultant] a company duly organized and existing under the laws of [city and country], with principal office at [insert address], hereinafter called "the Supplier".

WHEREAS, the Entity invited Bids for certain goods and services/works/consulting services, particularly *[Brief description of Project]*;

WHEREAS, the Supplier/Contractor/Consultant submitted a responsive bid and was awarded the contract for the procurement in the total amount of *[Contract price in words and figures, including currency],* hereinafter referred to as the "Contract Price."

NOW, THEREFORE, for and in consideration of the foregoing premises, the parties hereby agree as follows:

c. Unless otherwise stated, terms and expressions used in this Contract shall have the same meanings as those assigned to them in the Conditions of Contract, which form an integral part of this Contract.

d. The following documents as required by the Implementing Rules and Regulations of Republic Act No. 12009 shall form part and be read and construed as integral parts of this Contract, *viz.*:

a. Philippine Bidding Document (PBD); *[Select one, delete the others]*

- *For Procurement of Goods*

i. Invitation to Bid;
ii. Instruction to Bidders;
iii. Bid Form, including all the documents/statements contained in the Bidder's bidding envelopes, as annexes, and all other documents submitted (e.g., Bidder's response to request for clarifications on the bid), including corrections to the bid, if any, resulting from the Procuring Entity's bid evaluation;
iv. Bid Data Sheet;
v. Schedule of Requirements;
vi. Technical Specifications;
vii. General and Special Conditions of Contract;
viii. Supplemental Bid Bulletins, if any; and

ix. Other contract documents that may be required by existing laws and/or the Entity.

- *For Procurement of Infrastructure Projects*

i. Drawings/Plans;
ii. Specifications;/Scope of Work;
iii. Bill of Quantities;
iv. General and Special Conditions of Contract; and
v. Supplemental Bid Bulletins, if any;

- *For Procurement of Consulting Services*

i. General and Special Conditions of Contract;
ii. Terms of Reference;
iii. Request for Expression of Interest;
iv. Instructions to Bidders;
v. Bid Data Sheet;
vi. Addenda and/or Supplemental/Bid Bulletins, if any;
vii. Bid forms, including all the documents/statements contained in the Bidder's bidding envelopes, as annexes, and all other documents/ statements submitted (*e.g.*, bidder's response to request for clarifications on the bid), including corrections to the bid, if any, resulting from the Procuring Entity's bid evaluation;
viii. Eligibility requirements, documents and/or statements;
ix. Performance Security;
x. Notice of Award of Contract and the Bidder's *conforme* thereto; and
xi. Other contract documents that may be required by existing laws and/or the Entity.

b. Winning bidder's bid, including the Eligibility Requirements, Technical and Financial Proposals, and all other documents or statements submitted;

c. Performance Security;

d. Notice of Award of Contract; and the Bidder's Conforme thereto; and

e. Other contract documents that may be required by existing laws and/or the Procuring Entity concerned in the PBD, such as but not limited to the Notice to Proceed and Warranty Security.

e. In consideration of the Contract Price of *[Contract Price in words and figures],* or such other sums as may be determined in accordance with the terms of the Contract, the Supplier/Contractor/Consultant agrees to deliver and perform the items and related services for the *[Project Title]* described herein in accordance with the terms and conditions specified in the Contract and its annexed documents.

f. The *[Name of the Procuring Entity]* agrees to pay the above-mentioned sum to the Supplier/Contractor/Consultant in accordance with the schedule and manner provided in the Bidding Documents and its annexes.

g. Any dispute, difference, or claim arising out of or relating to this Contract, including its existence, validity, interpretation, breach, or termination thereof, may be submitted to arbitration or other form of alternative dispute resolution in accordance with the applicable law, such as Republic Act No. 9285 (Alternative

Dispute Resolution Act of 2004) or Executive Order No 1008, series 1985 (Construction Industry Arbitration Law).

IN WITNESS WHEREOF, the parties hereto have caused this Contract to be executed in accordance with the laws of the Republic of the Philippines on the day and year first above written.

For the Procuring Entity	*For the Bidder*
Head of the Procuring Entity or Duly Authorized Representative	Duly authorized to sign the Contract for and behalf of *[Bidders Name]*:
[Signature over Printed Name] *[Position/Designation]* *[Date]*	*[Signature over Printed Name]* *[Position/Designation]* *[Date]*

Signed in the presence of:

[Name and Signature] *Witness – Procuring Entity*	*[Name and Signature]* *Witness- Supplier*

ACKNOWLEDGMENT

BEFORE ME, A Notary Public for and in the _____, City/Province of _____, this _____ day of _____, 20_____, personally appeared the above-named persons who have satisfactorily proven to me their identity, through their identifying documents written below their names and signatures, that they are the same persons who executed and voluntarily signed the foregoing instrument consisting of ____ pages, including this page where this Acknowledgement is written, which they acknowledged before me as their free and voluntary act and deed.

WITNESS MY HAND AND SEAL this ___day of *[month] [year]*.

NAME OF NOTARY PUBLIC

Notarial Commission No. _____
Notary Public for _____until _____
Roll of Attorneys No. _____
PTR No. __, *[date issued], [place issued]*
IBP No. __, *[date issued], [place issued]*

Doc. No. _____
Page No. _____
Book No. _____
Series of _____

Omnibus Sworn Statement Form

[Note: The duly accomplished form shall be submitted with the Bid]

REPUBLIC OF THE PHILIPPINES)
CITY/MUNICIPALITY OF _____) S.S.

OMNIBUS SWORN STATEMENT

I, *[Name of Affiant]*, of legal age, *[Civil Status]*, *[Nationality]*, and with residence at [*Address of Affiant]*, after having been duly sworn in accordance with law, do hereby depose and state that:

1. *Select one, delete the others:*

   - *If sole proprietorship:* I am the sole proprietor or authorized representative of *[Name of Bidder]* with office address at *[Address of Bidder]*;

   - *If partnership, corporation, cooperative, or joint venture:* I am the duly authorized and designated representative of *[Name of Bidder]* with office address at *[Address of Bidder]*;

   - *If individual consultant not registered under a sole proprietorship, in case of Consulting Services:* I am the individual consultant or authorized representative of *[Name of Bidder]* with office address at *[Address of Bidder]*;

2. ***Select one, delete the others:***

   - *If sole proprietorship:* As the owner and sole proprietor or authorized representative of *[Name of Bidder]*, I have full power and authority to do, execute and perform any and all acts necessary to participate, submit the bid, and to sign and execute the ensuing contract for *[Project Title]* of the *[Name of the Procuring Entity][insert* "as supported by the attached duly notarized Special Power of Attorney" *for authorized representative]*;

   - *If partnership, corporation, cooperative, or joint venture:* I am granted full power and authority to do, execute and perform any and all acts necessary to participate, submit the bid, and to sign and execute the ensuing contract for *[Project Title]* of the *[Name of the Procuring Entity]*, as supported by the attached duly notarized Special Power of Attorney, Board/Partnership Resolution, or Secretary's Certificate, whichever is applicable*;*

   - *If individual consultant not registered under a sole proprietorship, in case of Consulting Services:* As the individual consultant or authorized representative of *[Name of Bidder]*, I have full power and authority to do, execute and perform any and all acts necessary to participate, submit the bid, and to sign and execute the ensuing contract for *[Project Title]* of the *[Name of the Procuring Entity]*, as

supported by the attached duly notarized Special Power of Attorney *for authorized representative*;

3. *[Name of Bidder]* is not "blacklisted" or barred from bidding by the Government of the Philippines or any of its agencies, offices, corporations, or Local Government Units, foreign government/foreign or international financing institution whose blacklisting rules have been recognized by the Government Procurement Policy Board; by itself or by relation, membership, association, affiliation, or controlling interest with another blacklisted person or entity;

4. Each of the documents submitted in satisfaction of the bidding requirements is an authentic copy of the original, complete, and all statements and information provided therein are true and correct;

5. *[Name of Bidder]* is authorizing the Head of the Procuring Entity or its duly authorized representative(s) to verify all the documents submitted;

6. *Select one, delete the others:*

   - *If sole proprietorship :* The *[Name of Bidder]* and its spouse are not related by consanguinity or affinity up to the third civil degree to the Head of the Procuring Entity, Procurement Agent (if engaged), End-User or Implementing Unit, project consultants, head of the Project Management Office, or the members of the Bids and Awards Committee (BAC), the Technical Working Group, and the BAC Secretariat;

   - *If partnership :* The partnership itself and the partners of *[Name of Bidder]* are not related by consanguinity or affinity up to the third civil degree to the Head of the Procuring Entity, Procurement Agent (if engaged), End-User or Implementing Unit, project consultants, head of the Project Management Office, or the members of the Bids and Awards Committee (BAC), the Technical Working Group, and the BAC Secretariat;

   - *If cooperative:* The cooperative itself and members of the board of directors, general manager, or chief executive officer of *[Name of Bidder]* are not related by consanguinity or affinity up to the third civil degree to the Head of the Procuring Entity, Procurement Agent (if engaged), End-User or Implementing Unit, project consultants, head of the Project Management Office, or the members of the Bids and Awards Committee (BAC), the Technical Working Group, and the BAC Secretariat;

   - *If corporation, or joint venture:* The corporation or joint venture itself, and officers, directors, and controlling stockholders of *[Name of Bidder]* are not related by consanguinity or affinity up to the third civil degree to the Head of the Procuring Entity, Procurement Agent (if engaged), End-User or Implementing Unit, project consultants, head of the Project Management Office, or the members of the Bids and Awards Committee (BAC), the Technical Working Group, and the BAC Secretariat;

- *If individual consultant not registered under a sole proprietorship, in case of Consulting Services:* The individual consultant and its spouse are not related by consanguinity or affinity up to the third civil degree to the Head of the Procuring Entity, Procurement Agent (if engaged), End-User or Implementing Unit, project consultants, head of the Project Management Office, or the members of the Bids and Awards Committee (BAC), the Technical Working Group, and the BAC Secretariat;

7. It is understood that failure to faithfully disclose its relationship with the Head of the Procuring Entity, members of the BAC, the TWG, and the BAC Secretariat, the head of the PMO or the end-user unit or implementing unit, and the project consultants of the Procuring Entity, or of the procurement agent by consanguinity or affinity up to the third civil degree, as well as its submission of beneficial ownership information containing false entries shall be subject to blacklisting under Section 100 of the Implementing Rules and Regulations (IRR) of Republic Act (RA) No. 12009, without prejudice to criminal and civil liabilities under applicable laws, including their accessory penalties, if any.

Select one, delete the rest:

- *In case of corporations: [Name of Bidder]* declares its beneficial ownership information consistent with its updated General Information Sheet or Beneficial Ownership Declaration Form or any other document duly submitted to the SEC and has maintained a valid and updated file therein in compliance with Sections 20.2.9.1, 81, and 82 of the IRR of RA No. 12009.

- *In case of Foreign Bidders: [Name of Bidder]* submitted an appropriate equivalent document in English issued by the country of the bidder concerned in accordance with Section 20.2.9.2 of the IRR of RA No. 12009.

8. *[Name of Bidder]* complies with existing labor laws and standards; and

9. *[Name of Bidder]* is aware of and has undertaken the following responsibilities as a Bidder:

    a) Carefully examine all of the Bidding Documents;

    b) Acknowledge all conditions, local or otherwise, affecting the implementation of the Contract;

    c) Made an estimate of the facilities available and needed for the contract to be bid, if any; and

    d) Inquire or secure Supplemental Bid Bulletin(s) issued for the *[Project Title]*.

10. *[Name of Bidder]* did not give or pay directly or indirectly, any commission, amount, fee, or any form of consideration, pecuniary or

otherwise, to any person or official, personnel or representative of the government in relation to any procurement project or activity.

11. In case advance payment was made or given to *[Name of Bidder]*, failure to perform or deliver any of the obligations and undertakings in the contract shall be sufficient grounds to constitute criminal liability under existing laws.

IN WITNESS WHEREOF, I have hereunto set my hand this _____ day of ___, 20___at _____, Philippines.

Duly authorized to sign the Bid for and behalf of:

[Insert Bidder's Name]

[Affiant's Signature over Printed Name]
[Position/Designation]
[Date]

JURAT

SUBSCRIBED AND SWORN to before me this _____ day of *[month] [year]* at *[place of execution]*, Philippines. Affiant/s is/are personally known to me and was/were identified by me through competent evidence of identity as defined in the 2004 Rules on Notarial Practice (A.M. No. 02-8-13-SC). Affiant/s exhibited to me his/her *[insert type of government identification card used]*, with his/her photograph and signature appearing thereon, with no. _____.

WITNESS MY HAND AND SEAL this ____day of *[month] [year].*

NAME OF NOTARY PUBLIC
Notarial Commission No. _____
Notary Public for _____until _____
Roll of Attorneys No. _____
PTR No. __, *[date issued], [place issued]*
IBP No. __, *[date issued], [place issued]*

Doc. No. _____
Page No. _____
Book No. _____
Series of _____.

Bid Securing Declaration Form

[The duly accomplished form shall be submitted with the Bid if bidder opts to provide this type of bid security]

REPUBLIC OF THE PHILIPPINES)
CITY/MUNICIPALITY OF _____) S.S.

BID SECURING DECLARATION

Project Identification No.: *[Number]*

To: *[Insert name of the Procuring Entity]*

I/We, the undersigned, declare that:

1) I/We understand that, according to your conditions, bids must be supported by a Bid Security, which may be in the form of a Bid Securing Declaration;

   [Insert paragraph for Unsolicited Offer with Bid Matching]

   I/We understand that upon conferment of the original offeror status under Section 30.6 of the Implementing Rules and Regulations (IRR) of Republic Act (RA) No. 12009, the offeror shall submit a Bid Securing Declaration within ten (10) days from the receipt of the certificate of conferment;

2) Select one, delete the other:

   - I/We accept that: (a) I/we will be automatically disqualified from bidding for any procurement contract with any Procuring Entity upon receipt of your Blacklisting Order; and, (b) I/we will pay the applicable fine provided under the Guidelines on the Use of Bid Securing Declaration, within fifteen (15) days from receipt of the written demand by the Procuring Entity for the commission of acts resulting to the enforcement of the Bid Securing Declaration under Sections 52.2 (a), 63.2, 69.1 and 100, except 100.3 (c),of the IRR of Republic Act No. 12009; without prejudice to other legal action the government may undertake; and

   (For Unsolicited Offer with Bid Matching)

   - I/We accept that: I/we will be automatically disqualified from any procurement opportunity of the Procuring Entity for a period of one (1) year on the first offense, two (2) years on the second offense, and perpetually on the third offense without prejudice to other legal action the government may undertake.

3) I/We understand that this Bid Securing Declaration shall cease to be valid on the following circumstances:

   a. Upon expiration of the bid validity period, or any extension thereof pursuant to your request;

b. I am/we are declared ineligible or post-disqualified upon receipt of your notice to such effect, and (i) I/we failed to timely file a request for reconsideration or (ii) I/we filed a waiver to avail of said right;

[Insert this paragraph for Unsolicited Offer with Bid Matching]

b. Upon contract award and the LCCRB is not the original offeror; or

c. I am/we are declared the bidder with the *[Insert Award Criterion[1]]* and I/we have furnished the performance security and signed the Contract.

IN WITNESS WHEREOF, I/We have hereunto set my/our hand/s this _____ day of *[month] [year]* at *[place of execution]*.

Duly authorized to sign the Bid for and behalf of:

[Insert Bidder's Name]

[Signature over Printed Name]
[Position/Designation]
[Date]

JURAT

SUBSCRIBED AND SWORN to before me this _____ day of *[month] [year]* at *[place of execution]*, Philippines. Affiant/s is/are personally known to me and was/were identified by me through competent evidence of identity as defined in the 2004 Rules on Notarial Practice (A.M. No. 02-8-13-SC). Affiant/s exhibited to me his/her *[insert type of government identification card used]*, with his/her photograph and signature appearing thereon, with no. _____.

WITNESS MY HAND AND SEAL this ____day of *[month] [year].*

NAME OF NOTARY PUBLIC
Notarial Commission No. _____
Notary Public for _____until _____
Roll of Attorneys No. _____
PTR No. __, *[date issued], [place issued]*
IBP No. __, *[date issued], [place issued]*

Doc. No. _____
Page No. _____
Book No. _____
Series of _____.

STATEMENT OF ONGOING GOVERNMENT AND PRIVATE CONTRACTS INCLUDING CONTRACT AWARDED BUT NOT YET STARTED

The Bids and Awards Committee
Department of Energy
Energy Center, Rizal Drive, Bonifacio Global City
Taguig, Metro Manila

Ongoing or awarded but not yet started projects for the period _____(last (5) years), where applicable.

Procuring Entity / Date of Contract	Kinds of Goods Sold and/or Services Offered	Amount of Contract and Value of Outstanding Contracts	Date of Delivery	Specify whether a Prospective Bidder is a Manufacturer, Supplier, Distributor or Service Provider	Indicate whether "Similar" or "Not Similar"

Submitted By:

_____

(Signature over Printed Name)

Note:
1. May be reproduced, if necessary
2. Please attach Purchase Order, Notice of Award or other similar document

STATEMENT OF SINGLE LARGEST COMPLETED CONTRACT

The Bids and Awards Committee
Department of Energy
Energy Center, Rizal Drive, Bonifacio Global City
Taguig, Metro Manila

Single Largest Completed Contract (SLCC) for the period _____
(last five (5) years), where applicable.

Procuring Entity / Date of Contract	Kinds of Goods Sold and/or Services Offered	Amount of Contract and Value of Outstanding Contracts	Date of Delivery	Specify whether a Prospective Bidder is a Manufacturer, Supplier, Distributor or Service Provider	Indicate whether "Similar" or "Not Similar"

Submitted By:

_____
(Signature over Printed Name)

Note:
1. May be reproduced, if necessary
2. Please attach certificate of acceptance or other similar contracts

Checklist of Technical and Financial Documents
(Goods and Services)

I. TECHNICAL COMPONENT ENVELOPE *(one (1) original copy and two copies)*

Class "A" Documents

Legal Documents

(a) Valid PhilGEPS Registration Certificate (Platinum Membership) (all pages) **in accordance with Section 20 of the IRR of RA12009**;

Technical Documents

(b) Statement of the prospective bidder of all its ongoing government and private contracts, including contracts awarded but not yet started, if any, whether similar or not similar in nature and complexity to the contract to be bid **(Bidding Form Annex A)**; **and**

(f) Statement of the bidder's Single Largest Completed Contract (SLCC) **(Bidding Form Annex B)** similar to the contract to be bid, except under conditions provided for in Sections 52.4.1.3 and 52.4.2.4 of RA No. 12009 and its IRR, within the relevant period as provided in the Bidding Documents; **and**

(g) Bid Security in the prescribed form and amount. The bidder shall submit a Bid Securing Declaration, or any form of bid security in an amount not less than the required percentage of the ABC as provided under Section 56.2 of the IRR of RA 12009; and

(h) Conformity with the Technical Specifications, which may include production/delivery schedule, manpower requirements, and/or after-sales/parts, as stated in Section VII. Technical Specification; **and**

(i) Original duly signed Omnibus Sworn Statement (OSS) **(Bidding Form Annex D) and** if applicable, Original Notarized Secretary's Certificate in case of a corporation, partnership, or cooperative; or Original Special Power of Attorney of all members of the joint venture giving full power and authority to its officer to sign the OSS and do acts to represent the Bidder

Financial Documents

(j) The Supplier's audited financial statements, showing, among others, the Supplier's total and current assets and liabilities, electronically submitted and "acknowledged received" and/ or stamped "received" by the BIR or its duly accredited and authorized institutions, for the preceding calendar year which should not be earlier than two (2) years from the date of bid submission; and

(k) The prospective bidder's computation of Net Financial Contracting Capacity (NFCC) **or A** committed Line of Credit from a Universal or Commercial Bank in lieu of its NFCC computation.

Class "B" Documents

If applicable, a valid joint venture agreement (JVA), in case the joint venture is already in existence. In the absence of a JVA, duly notarized statements from all the potential joint venture partners should be included in the bid, stating that they will enter into and abide by the provisions of the JVA in the event that the bid is successful. Failure to enter into a joint venture in the event of a contract award shall be a ground for the forfeiture of the bid security.

Each partner of the joint venture shall submit their respective PhilGEPS Certificates of Registration in accordance with Section 20.2.9.1 of this IRR. The submission of technical and financial eligibility documents by any of the joint venture partners constitutes compliance; Provided, That the partner responsible to submit the NFCC shall likewise submit the Statement of all of its ongoing contracts.

II. FINANCIAL COMPONENT ENVELOPE ***(one (1) original copy and two copies)***

(l) Original of duly signed and accomplished Financial Bid Form **(Bidding Form Annex E)**; **and**

(m) Original of duly signed and accomplished Price Schedule(s) **(Bidding Form Annex F)**.

Other documentary requirements under RA No.12009 (as applicable)

(n) *[For foreign bidders claiming by reason of their country's extension of reciprocal rights to Filipinos]* Certification from the relevant government office of their country stating that Filipinos are allowed to participate in government procurement activities for the same item or product.

(o) Certification from the DTI if the Bidder claims preference as a Domestic Bidder or Domestic Entity.

III. Post-Qualification Requirements:

1. In case only the PhilGEPS Registration Certificate (Platinum Membership) was submitted during the bid opening, submit the certified true copies of the following:
   (a) Registration certificate from Securities and Exchange Commission (SEC), Department of Trade and Industry (DTI) for sole proprietorship, or Cooperative Development Authority (CDA) for cooperatives or its equivalent document;
   (b) Mayor's or Business permit issued by the city or municipality where the principal place of business of the prospective bidder is located, or the equivalent document for Exclusive Economic Zones or Areas; and

(c) Tax clearance per E.O. No. 398, s. 2005, as finally reviewed and approved by the Bureau of Internal Revenue (BIR).

2. Latest Income/Business Tax Returns;
3. Certificate of PhilGEPS Registration;
4. Pictures of its principal place of business;
5. In case of Goods, submit brochures/prototype/actual sample of the products being offered or in case of Services, concept paper/write-up or description of the services being offered; which must be submitted on the date indicated in the post-qualification letter, addressed to the TWG Head, and certifies that it is the bidder's official and final offer. Non-submission of this requirement may be a ground for disqualification.
6. In case of procurement for manpower services, proof of contribution/remittance for SSS, Philhealth and Pag-ibig for the last six (6) months from the opening of bid; and
7. Other appropriate licenses and permits required by law as stated in the bidding documents/post-qualification letter.


Republic of the Philippines
gppb
Government Procurement Policy Board